Crypto VGA

Component Technical Manual

Document Ref 942179-001
Rev - 3
04/2009

Great care has been taken in the preparation of this manual however Tokheim shall not be liable for any misunderstanding, errors and/or loss or defect arising from the use of this manual.

Tokheim shall not be liable for damage to the product, nor for personal or third party injury, caused by incorrect use of the product or by attempts to maintain or to repair the product by parties other than those fully trained by Tokheim or by its accredited third party representatives.

Please contact your nearest service department, at the relevant address printed on the back cover of this manual, should any aspect of this manual be unclear.

© Copyright by Tokheim. All intellectual rights arising from, accruing to,and residing in this manual belong to Tokheim. No part of this document may be reproduced in any form without the express written permission of Tokheim.

Tokheim reserves the right to apply changes to this document and the equipment without further notice.

REVISION RECORD

Date	Revision	Page/Chapter	Reason
13/09/2007	1	All	Original Issue
16/01/2009	2	3,4	Main Contents Updated
16/01/2009	2	3-1	Section 3 Contents updated
16/01/2009	2	3-2	Mains Connection section added
16/01/2009	2	3-3	Repagination
16/01/2009	2	4-1	Section 4 Contents updated
16/01/2009	2	4-3 to 4-4	New Wiring Overviews added
16/01/2009	2	5-1	Section 5 Contents updated
16/01/2009	2	5-7	Cash Reader 942907 variants added
16/01/2009	2	5-12 to 5-13	DIT PSU drawing & parts list updated
16/01/2009	2	5-14 to 5-15	CVGA PSU drawing & parts list added
16/01/2009	2	5-16 to 5-17	Repagination
16/01/2009	2	5-18 to 5-19	OPT Mains Power Rail drawing & parts list added
16/01/2009	2	5-20 to 5-22	Repagination
16/01/2009	2	5-23	Parts list updated (RFID HW) & Repagination
16/01/2009	2	5-24 to 5-25	Drawing & parts list updated & Repagination
16/01/2009	2	5-26 to 5-29	Repagination
16/01/2009	2	5-30 to 5-31	Drawing & parts list updated & Repagination
16/01/2009	2	5-32 to 5-33	Repagination
16/01/2009	2	5-34	Spare Parts List added
27/04/2009	3	Front cover	Additon of OPT Pole graphic
	3	Chapter 2	New graphic Island Terminal (Product information)
	3	Chapter 3	New section covering Slimline OPT installation
	3	Chapter 4	Wiring overview Crypto VGA OPT IC
	3	Chapter 5	Various Assembly / Part number changes

This page is intentionally blank

CONTENTS

1 INTRODUCTION 1-2
1.1 How to Use this Manual 1-2
1.2 Product Scope 1-2
1.3 Authorised Technicians 1-2
1.4 Contact Information 1-3
1.5 Health & Safety 1-3
1.5.1 Safety Checklist 1-3
1.5.2 Duties of the Employees 1-3
1.5.3 Hazards 1-4
1.5.4 Warning Signs 1-4
1.5.5 Personal Protective Equipment (PPE) 1-6
1.6 Standards & Certificates 1-7

2 PRODUCT INFORMATION 2-2
2.1 System Description 2-2
2.2 Key Characteristics 2-2
2.2.1 Crypto VGA Hardware 2-3
2.2.2 Environmental Conditions 2-3
2.3 Configuration 2-3
2.3.1 Receipt Printer 2-4
2.3.2 VGA / Touch Sensor 2-4
2.3.3 Manual Card Reader 2-4
2.4 Crypto VGA Terminal Dimensions 2-5
2.4.1 Crypto VGA Standalone Island Terminal 2-5
2.4.2 Crypto VGA Add On Units 2-6
2.4.3 Crypto VGA DIT 2-7
2.4.4 Crypto VGA BNA 2-8

3 INSTALLATION OF THE CRYPTO VGA 3-2
3.1 General 3-2
3.2 Mains Connection 3-2
3.3 Retrofitting the Crypto VGA 3-2
3.4 Communication Connections 3-2
3.5 Crypto VGA Connections across the Forecourt 3-3
3.5.1 Panduit Connector Instructions 3-4
3.6 Installation of the OPT IQ BNA 3-5
3.6.1 Ground Frame Installation Procedure 3-5
3.6.2 Lifting and Placement Procedure 3-6
3.7 Installation of the Slimline OPT Pole 3-7
3.7.1 Lifting and Placement Procedure 3-7
3.7.2 Connecting the Cables and Connectors 3-9
3.7.3 Powering up 3-11
3.7.4 Bill of Material 3-13
3.7.5 Exploded Drawing 3-15

4 CRYPTO VGA WIRING DIAGRAMS 4-2
4.1 Wiring Overview - Crypto VGA 4-2
4.2 Wiring Overview - Crypto VGA OPT I C 4-3
4.3 Wiring Overview - CVGA OPT Mains Power 4-4

(CONT.)

5 CRYPTO VGA PARTS LIST 5-2
5.1 Crypto VGA OPT Assembly 5-2
5.2 Crypto VGA BNA Assembly 5-4
5.2.1 Crypto VGA BNA Cable Gutter Assembly 5-8
5.3 Crypto VGA DIT Assembly 5-10
5.4 Crypto VGA DIT PSU Assembly 5-12
5.5 CVGA PSU Assembly 5-14
5.6 Crypto VGA Panduit Assembly 5-16
5.7 OPT Mains Power Rail Assembly 5-18
5.8 Crypto VGA PSU & Lamp Assembly 5-20
5.9 Crypto VGA Payment Assembly 5-22
5.10 Crypto VGA Printer Assembly 5-24
5.11 Crypto VGA Bracket Assemblies 5-26
5.11.1 Single-Sided 5-26
5.11.2 Double-Sided 5-28
5.12 Crypto VGA Lock Assembly 5-30
5.13 Euro Lock Assembly 5-32
5.14 Recommended Spare Parts List 5-34

6 CRYPTO VGA BASIC MAINTENANCE 6-2
6.1 Accessing the Crypto VGA 6-2
6.2 Cleaning Cards 6-2
6.2.1 Magnetic Stripe Cleaning Cards 6-2
6.2.2 Chipcard Cleaning Cards 6-2
6.3 Replacing a Paper Roll 6-3
6.4 Paper Jams 6-4
6.5 Printer Cutter Units/Blades 6-5
6.6 Cleaning the Display Screen 6-5
6.7 Bank Note Acceptors (BNA) 6-6
6.8 Changing a bulb (Crypto VGA OPTs only) 6-7
6.9 Changing the battery pack (Crypto VGA OPTs only) 6-8

CONTENTS

1 INTRODUCTION 1-2
1.1 How to Use this Manual 1-2
1.2 Product Scope 1-2
1.3 Authorised Technicians 1-2
1.4 Contact Information 1-3
1.5 Health & Safety 1-3
1.5.1 Safety Checklist 1-3
1.5.2 Duties of the Employees 1-3
1.5.3 Hazards 1-4
1.5.4 Warning Signs 1-4
1.5.5 Personal Protective Equipment (PPE) 1-6
1.6 Standards & Certificates 1-7

1 INTRODUCTION

1.1 How to Use this Manual

It is recommended that all relevant persons familiarise themselves with the contents of this manual prior to carrying out any operations or procedures.

This manual is divided into sections which are described as follows: -

Section 1 - Introduction

This section contains information on how to use the manual, the scope of equipment covered, recommendations on qualified technicians and contact information. It also includes relevant health and safety information required for the safe installation of the product.

Section 2 - Product Information

This section contains the system descriptions and operating principles of Tokheim's Crypto VGA payment system.

Section 3 - Installation of the Crypto VGA unit

This section provides the necessary information for the installation and connection of the Crypto VGA unit.

Section 4 - Crypto VGA Wiring Diagrams

This section details the wiring diagrams for the Crypto VGA.

Section 5 - Crypto VGA Parts List

This section details the assembly drawings and part identification lists for the Crypto VGA.

1.2 Product Scope

This manual is designed to cover the Crypto VGA in Quantium T-range dispensers and later models.

1.3 Authorised Technicians

Only qualified technicians familiar with the contents of this manual should carry out the procedures contained herein.

WARNING : ANY ATTEMPTS TO CARRY OUT THE PROCEDURES OF THIS MANUAL, BY UNQUALIFIED OR UNAUTHORISED PERSONS, MAY RESULT IN SERIOUS INJURY OR LOSS OF LIFE.

NOTE : THIS MANUAL IS NOT INTENDED TO REPLACE THE SERVICES OF A FULLY QUALIFIED TECHNICIAN.

1.4 Contact Information

For information relating to the contents of this manual please contact: -

Technical Author
Tokheim UK Ltd.
Dundee, Scotland

For technical assistance please contact the appropriate service division listed on the back cover of this manual.

1.5 Health & Safety

1.5.1 SAFETY CHECKLIST

- It is obligatory that this checklist be fully complied with during all work at the petrol station, particularly construction or repair work.
- It is the duty of the contractor to ensure that all workers employed by him obey each and all of the relevant laws, directives and other regulations.

Areas where special caution is required

- The insides of tanks, tubes, dome shafts, filling shafts, change over shafts, vessels and dispensers.
- All areas in which fuel vapour that is heavier than air can accumulate, e.g. fuel separator, draining shafts, low located rooms, cellars, excavations, pipe trenches etc.
- The areas around the outlets of tank ventilation pipes, especially during the filling phase.
- All areas near dispensers, tanker lorries and other vehicles while they are being tanked up, and particularly when there is a lack of wind.
- A radius of 1.0 metres around petrol carrying pipes, as well as pipes that are not vapour free.
- Silt traps.

1.5.2 DUTIES OF THE EMPLOYEES

- To ensure optimal accident prevention in our company, in addition to general rules applying to worker's protection, it is necessary to take into account all the national protection of workers legislation and to actively support all measures which enhance safety standards.
- It is an employee's duty to follow all company directives regarding the prevention of accidents, unless such directives can be proved to be unfounded.
- Employees should not follow any instructions that go against safety standards.
- Employees are only permitted to use equipment for its original purpose, and this is defined by the company alone.
- If an employee detects equipment that is deficient in terms of safety, he shall eliminate this deficiency immediately. If such safety rectification is not part of his defined area of activities, or if his knowledge is insufficient to carry out such work he must immediately inform his superior about the detected safety deficiency.

This equally applies to:

1) **Work Materials** which have not been correctly packed or correctly marked in order to meet safety requirements.

2) **Work Methods** or work processes which have not been correctly coordinated or controlled in order to meet safety requirements.

3) **Where dangerous activities are carried out by several persons**, the need for a permanent faultless communication between them in order to avoid dangerous events shall require the appointing of one person in order to carry out overall supervision.

1.5.3 HAZARDS

Prior to starting work, the dispenser must be isolated (i.e. entirely disconnected from the mains supply) and the mains supply switch locked in the OFF position. The submerged pump (if applicable) and control signals from the dispenser must also be isolated. This is done to provide safety for the technician. As a further precaution, switch off the mains supply in the service station shop and place a clear notice on the switch to avoid it being turned on again inadvertently.

WARNING : THE CONNECTION AND DISCONNECTION OF ELECTRICAL CONNECTIONS MAY ONLY BE CARRIED OUT BY QUALIFIED PERSONNEL AUTHORISED FOR SUCH ACTIVITIES. WORK IN DANGEROUS AREAS MUST BE MADE SAFE BY OBSERVING ALL THE NATIONAL SAFETY REQUIREMENTS IN FORCE.

It is not permitted to put a fuel dispenser into operation before an authorised official has inspected it and released it. This depends upon the national regulations in force.

Dismantled packaging and cladding must be stored in such a way as to avoid damage to components or injuries to persons. Covers that can be opened, such as the calculator housing, should be handled with care. Ensure that the retaining catch is placed in the correct position to prevent the cover falling onto the head of the service engineer or other persons in the area.

At unattended service stations, every end-user should be able to read the User Instructions. They should be visible on a notice board or integrated into the DIT and should be sufficiently well lit so that they can be read at night.

At unattended service stations break away couplings must always be used to reduce the danger caused by a motorist driving off with the nozzle still in the tank.

1.5.4 WARNING SIGNS

The following warning signs are fitted as standard, on the dispenser, however they may vary according to individual country requirements or customer specifications.

SIGN	MEANING	POSITION
	Do not use mobile phones	Visible from both sides of dispenser
	Naked flames and smoking forbidden	Visible from both sides of dispenser
	Do not spill fuel on the ground	Visible from both sides of dispenser
	Stop vehicle engine	Visible from both sides of dispenser
	Trucks only	At Diesel high speed dispensers near the nozzle boots
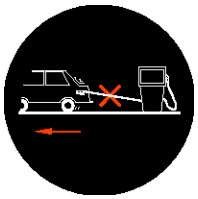	Do not drive away with nozzle in tank	Visible from both sides of dispenser
For more information see User Manual available at this station		Next to User Instructions near the nozzle boot

1.5.5 PERSONAL PROTECTIVE EQUIPMENT (PPE)

PROTECTIVE CLOTHING

The following clothing should be worn **at all times** during installation and maintenance procedures:-

- Protective helmet.
- Protective shoes (conductive).
- Protective gloves and/or protective hand cream.
- Anti static clothing.
- Eye protection.

SAFETY EQUIPMENT FOR WORKING IN HAZARDOUS AREAS

The following safety equipment is required for working in hazardous areas:-

- Only spark free tools are permitted for work on dispensers.
- Work on bearings is only permitted using the standard workshop tools authorised for this kind of work.
- The use of all electrical tools is strictly prohibited.
- Only the use of explosion protected work lights is permitted.
- The use of telecommunications equipment in hazardous areas is strictly prohibited.

SAFETY INSTRUCTIONS

The following safety instructions must be adhered to during installation and maintenance procedures:-

- Inhalation of petrol vapour must be avoided. Suitable precautions must be taken and where necessary respirators used.
- Avoid direct contact of fuel with the skin.
- Use suitable protective clothing, protective gloves and/or protective hand cream.
- Avoid fuel spills.
- No smoking, no naked flames are permitted.
- Long hair and ties can get caught in moving parts. Hair must be suitably covered.

1.6 Standards & Certificates

Tokheim Crypto VGA standalone and integrated units are constructed in conformity with the requirements of all the applicable European Directives (Machinery 98/37/EC; EMC 89/336/EEC; LVD 2006/95/EC) and compliant with OIML R177.

Dispenser integrated terminals are incorporated into Tokheim fuel dispensers which conform to the essential requirements of the Machinery Directive 98/37/EC.

The components used within the OPTimum, including connection facilities, are selected in accordance with the European Standard EN BS 60079-0 (Electrical Apparatus for explosive gas atmospheres) and the supplementary Standards listed therein.

The Crypto VGA payment terminal is also EMV 2000 approved and PCI POS AFD approved. Compliant with Anti Fishing Anti Skimming (AFAS) requirements in France.

The production and end test is controlled through the Quality Assurance systems within the Tokheim Manufacturing Centres.

This page is intentionally blank

CONTENTS

2 PRODUCT INFORMATION 2-2
2.1 System Description 2-2
2.2 Key Characteristics 2-2
2.2.1 Crypto VGA Hardware 2-3
2.2.2 Environmental Conditions 2-3
2.3 Configuration 2-3
2.3.1 Receipt Printer 2-4
2.3.2 VGA / Touch Sensor 2-4
2.3.3 Manual Card Reader 2-4
2.4 Crypto VGA Terminal Dimensions 2-5
2.4.1 Crypto VGA Standalone Island Terminal 2-5
2.4.2 Crypto VGA Add On Units 2-6
2.4.3 Crypto VGA DIT 2-7
2.4.4 Crypto VGA BNA 2-8

2 PRODUCT INFORMATION

2.1 System Description

Tokheim's Crypto VGA payment terminal incorporates advanced colour touchscreen technology enclosed in a fraud protective housing to provide secure pay-at-the-pump facilities with an up-to-date and secure user interface.

The Crypto VGA is available as:-

- Dispenser-integrated payment terminal (DIT) which can be delivered pre-installed in a new dispenser or integrated at a later date into Quantium T and 10 series dispensers (single or double-sided)
- Standalone island terminal (single-sided only)
- Add-on unit for third party dispensers (single or double-sided)
- Optionally with the Bank Note Acceptor (BNA)

DIT WITH MULTIMEDIA

ADD-ON UNIT

ISLAND TERMINAL

2.2 Key Characteristics

The Crypto VGA has the following key characteristics:-

- Modular micro-processor hardware
- Off-the-shelf real-time operating system
- Modular design harmonised with dispenser design
- Audio-signal/feedback
- Battery Back-up
- Alarm Contacts
- Card reader for magnetic stripe cards and/or chip cards
- EMV and PCI approval

Additional Crypto VGA characteristics:-

- VGA touchscreen
- Touchscreen based security PIN pad to allow all data to be read and entered within the same screen e.g. PIN code, pump number, mileage etc.
- Anti-intrusion protection integrated into the design
- Controlled through the Fuel POS enables the provision of a variety of additional functionality such as remote diagnostics, audio/visual instructions, advertising etc.

2.2.1 CRYPTO VGA HARDWARE

- Manual card reader for magnetic stripe cards and/or chip cards
- High speed thermal ticket printer with automatic cutter and “drop down” ticket bin with paper-end/low detection
- Full colour 6.4” VGA touchscreen with NFI touch panel
- Touchscreen based security PIN-pad
- TCP/IP interface for high speed, high bandwidth data streams
- LAN connection to Fuel POS system
- Mains : single phase 230V AC

2.2.2 ENVIRONMENTAL CONDITIONS

- Ambient temperature : -25°C to +60°C for standard configuration
- Relative humidity : 5% to 95% non-condensing

2.3 Configuration

The Crypto VGA is only available in a single secure unit configuration with no user-defined or country specific parts.

The main components of the OPT are:-

- Receipt Printer (refer to section 1.3.1)
- VGA / Touch sensor (refer to section 1.3.2)
- Manual Card Reader (refer to section 1.3.3)

2.3.1 RECEIPT PRINTER

All OPTimum IQ units are fitted with the standard receipt printer, automatic cutter and printer controller board. A drop-down ticket bin is also supplied to avoid the risk of paper jams caused by customers removing the ticket prior to completion of cutting.

The basic characteristics of the receipt printer are as follows:-

- Printing Method : Thermal dot line printing (448 dots per line)
- Effective Printing Width : 56mm
- Printing Speed : 400 dot lines per second
- Paper Feed Method : Friction - Pitch 0.125mm per minute force 100g
- Motor : 4 phase step motor 24V DC (+/- 5%)
- Printing Head Circuit : 5V DC (+/- 5% 100mA)
- Printing Head Driving : 5V DC (+/- 5% 1.7A at 25% duty)
- Paper Width : 59.5mm (+/- 5mm)
- Paper Roll Diameter : <160mm
- Temperature Detector : By thermistor
- Head Open Detection : By Mechanical Switches
- Paper End Detection : By Photo Interruptor
- Paper Low Detection : Optional - by Photo Interruptor
- Paper Replacement : Auto Feed (once new roll in position)
- Ambient Temperature Range : -25°C to +50°C (with direct sun radiation the printer can temporarily stop working at an ambient temperature of 45°C)

2.3.2 VGA / TOUCH SENSOR

The touchscreen based security PIN-pad allows all data to be read and entered within the same screen e.g. PIN code, pump number, mileage etc. Control via the Fuel POS provides the means for a variety of added functionality such as remote diagnostics, audio/visual instructions, advertising etc.

- Capacitive touch sensor with toughened anti-glare glass

2.3.3 MANUAL CARD READER

The EMV 2000 compatible manual operated card reader is available for magnetic stripe cards and/or chip cards. The main characteristics are:-

- Magnetic Cards : Read track 1,2,3 with ISO conformity
- Recording Method : FM decoding (F2F)
- Card Feeding Method : Manual (push/pull)
- Card Feeding Speed : 8-127cm per second
- Service Life : >500,000 passes
- PCI POS AFD offline and online compatible

2.4 Crypto VGA Terminal Dimensions

2.4.1 CRYPTO VGA STANDALONE ISLAND TERMINAL

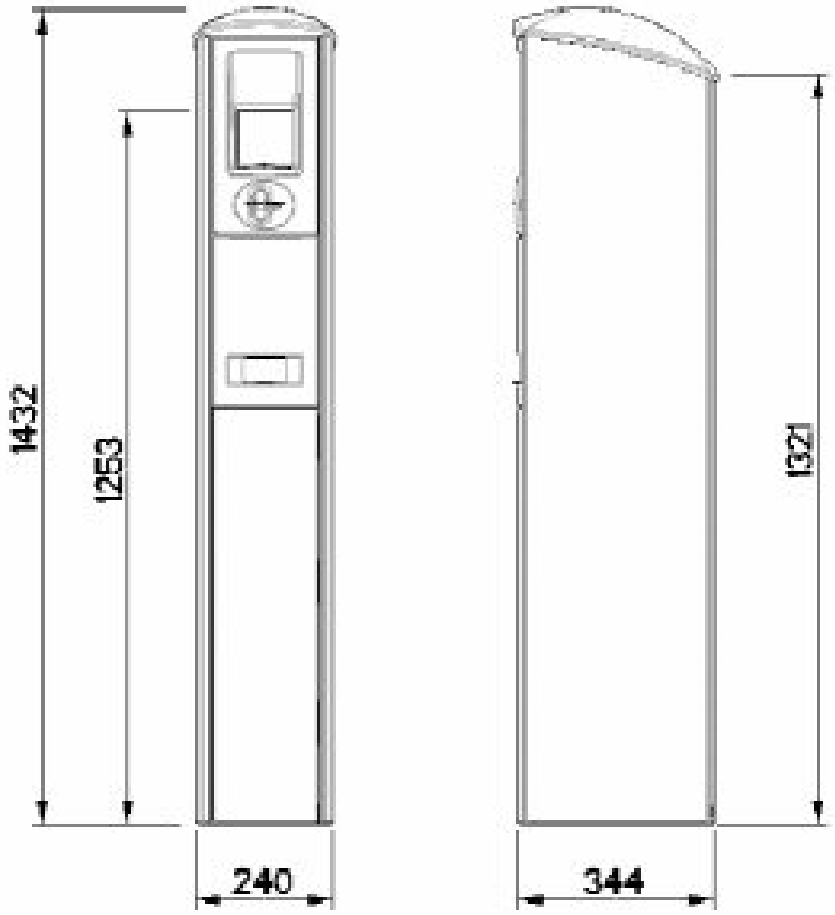

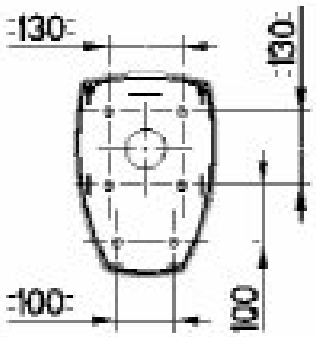

2.4.2 CRYPTO VGA ADD ON UNITS

CRYPTO VGA PAYMENT ASSEMBLY

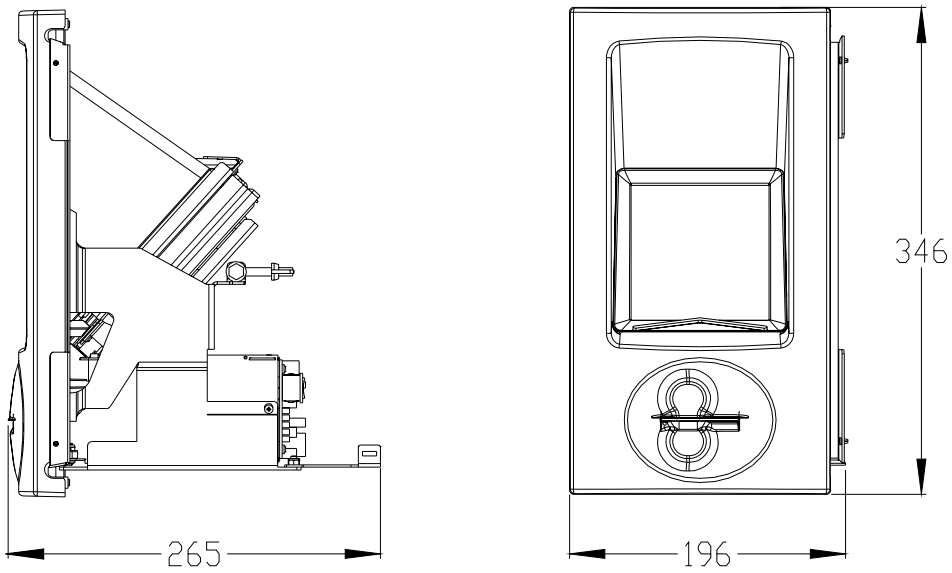

CRYPTO VGA PRINTER ASSEMBLY

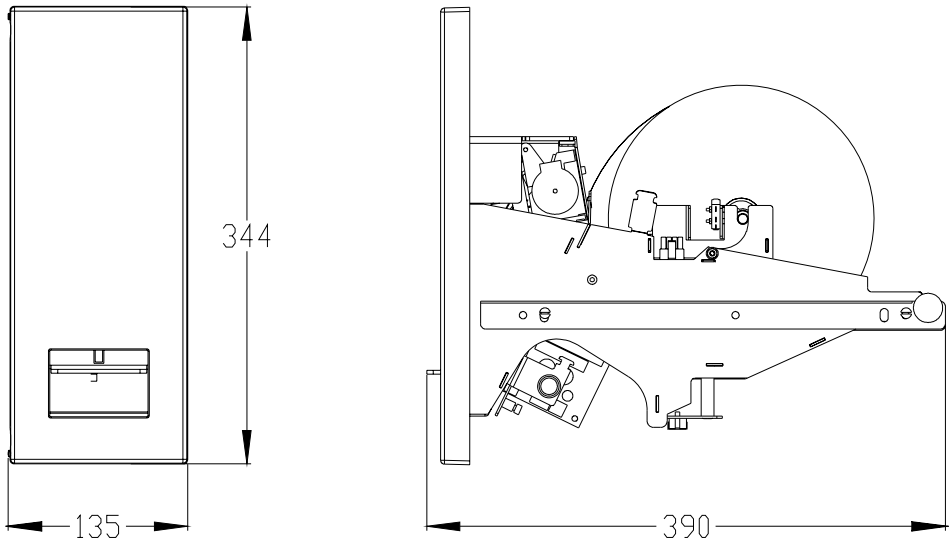

2.4.3 CRYPTO VGA DIT

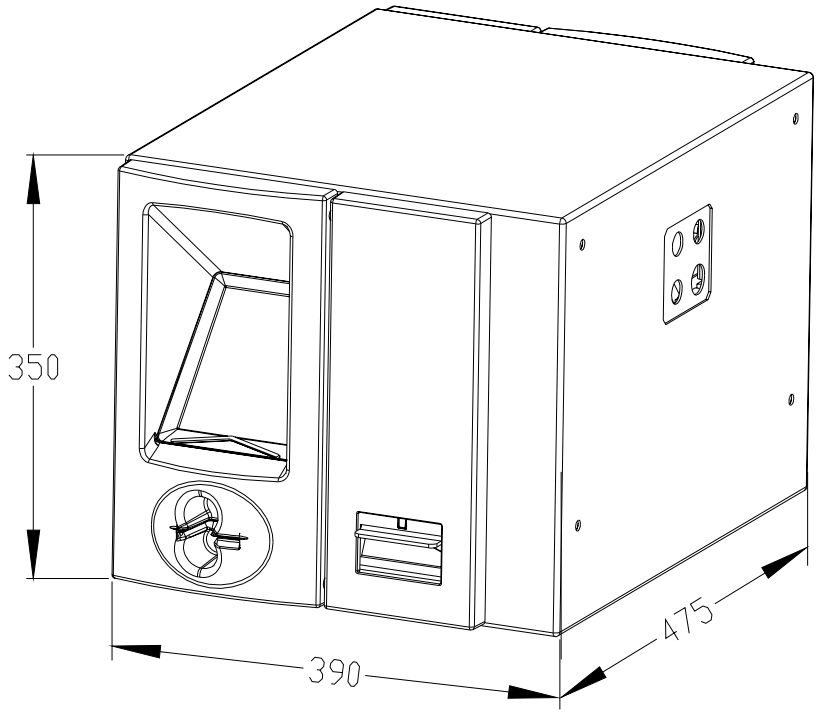

2.4.4 CRYPTO VGA BNA

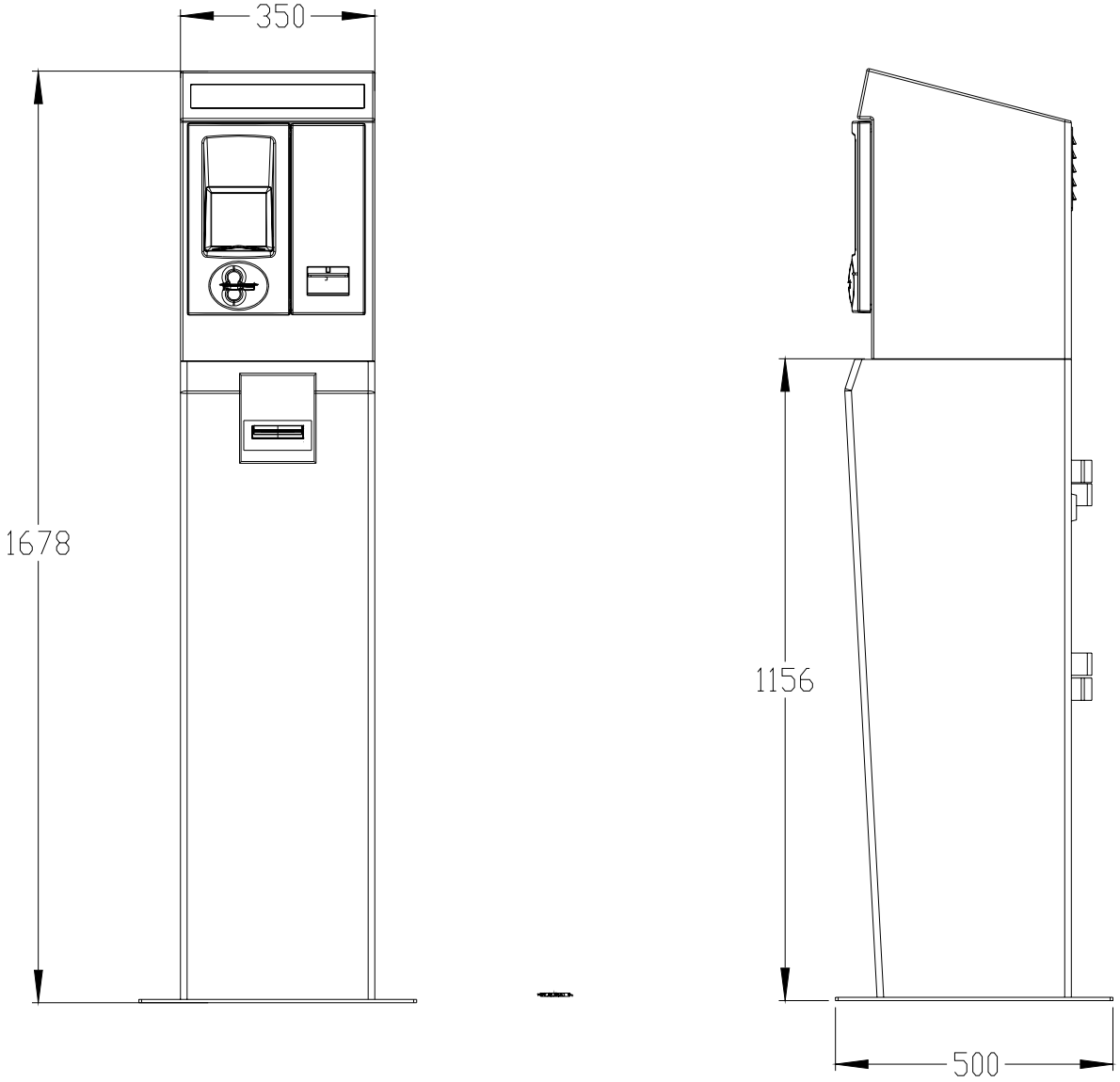

CONTENTS

3 INSTALLATION OF THE CRYPTO VGA 3-2
3.1 General 3-2
3.2 Mains Connection 3-2
3.3 Retrofitting the Crypto VGA 3-2
3.4 Communication Connections 3-2
3.5 Crypto VGA Connections across the Forecourt 3-3
3.5.1 Panduit Connector Instructions 3-4
3.6 Installation of the OPT IQ BNA 3-5
3.6.1 Ground Frame Installation Procedure 3-5
3.6.2 Lifting and Placement Procedure 3-6
3.7 Installation of the Slimline OPT Pole 3-7
3.7.1 Lifting and Placement Procedure 3-7
3.7.2 Connecting the Cables and Connectors 3-9
3.7.3 Powering up 3-11
3.7.4 Bill of Material 3-13
3.7.5 Exploded Drawing 3-15

3 INSTALLATION OF THE CRYPTO VGA

This section describes the procedures to be followed for the safe installation of the Crypto VGA unit.

3.1 General

Always follow the safety checklist as detailed in Section 1.5.

Before starting any maintenance procedure:-

- Ensure that all necessary tools and replacement parts are available.
- Ensure the dispenser is isolated and all power is turned off.
- When working on or near a dispenser, always act in accordance with general safety rules and regulations.
- Cordon off the dispenser under repair.
- Wear appropriate Personal Protective Clothing as recommended in Section 1.5.5.

3.2 Mains Connection

The Crypto VGA is equipped with a double insulated power supply to protect against the possibility of electric shock.

For more details see CVGA OPT mains power drawing in Chapter 4.

3.3 Retrofitting the Crypto VGA

The Crypto VGA unit should only be retrofitted by authorised Tokheim personnel. Contact your nearest SSD listed on the back of this manual.3.2 Retrofitting the Crypto VGA

The Crypto VGA unit should only be retrofitted by authorised Tokheim personnel. Contact your nearest SSD listed on the back of this manual.

3.4 Communication Connections

Prior to the Crypto VGA unit being connected, the appropriate video and audio source must be made available within the kiosk. The communication cables from the kiosk typically consist of one Cat 5 ethernet cable per side. These cables should be routed through the dispenser using the appropriate glands supplied in the kit.

Routing of the communication cables should be completed prior to commencing the unit installation.

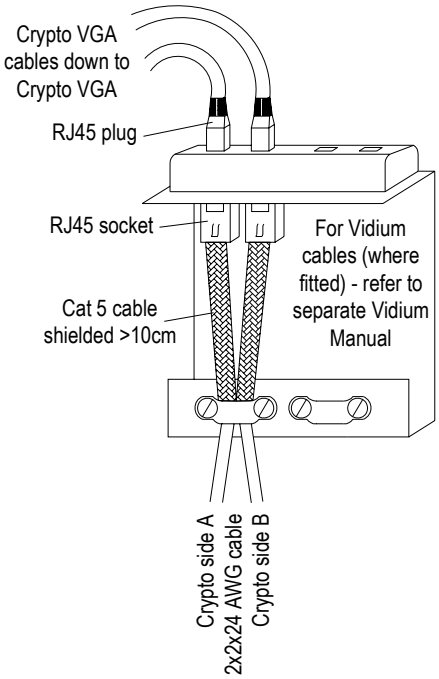

3.5 Crypto VGA Connections across the Forecourt

Refer to specific dispenser Installation Manuals to gain access to the dispenser electronic areas.

Tokheim recommends the use of an oil resistant certified PUR Cat 5 ethernet installation cable terminated with an RJ45 connector and cable 904094-001 to connect to the Crypto VGA processor.

Note : The information in this section relates to Tokheim's recommended installation but differences may exist in the standards relating to installation in different countries and local regions, in which case the local and/or national standards must be employed.

INSTRUCTIONS

1) When the recommended Cat 5 ethernet installation cable is used, feed the cable (commonly coloured blue/green) up through the cable glands and into the calculator head.

   IMPORTANT : Keep cable taut to avoid any "antenna" effect.

2) Locate the bracket for the Crypto VGA/Vidium connections.
3) Fit a suitable RJ45 connector to the end of the installation cable.

   IMPORTANT : Ensure that the braided shield is stripped down well (at least 10cm).

4) Connect the Crypto VGA socket(s) to the bracket.
5) Connect the RJ45 plug for the Crypto VGA processor to the RJ45 socket on the installation cable.
6) Where applicable, refer to separate Crypto VGA User Manual to program the Crypto VGA.

3.5.1 PANDUIT CONNECTOR INSTRUCTIONS

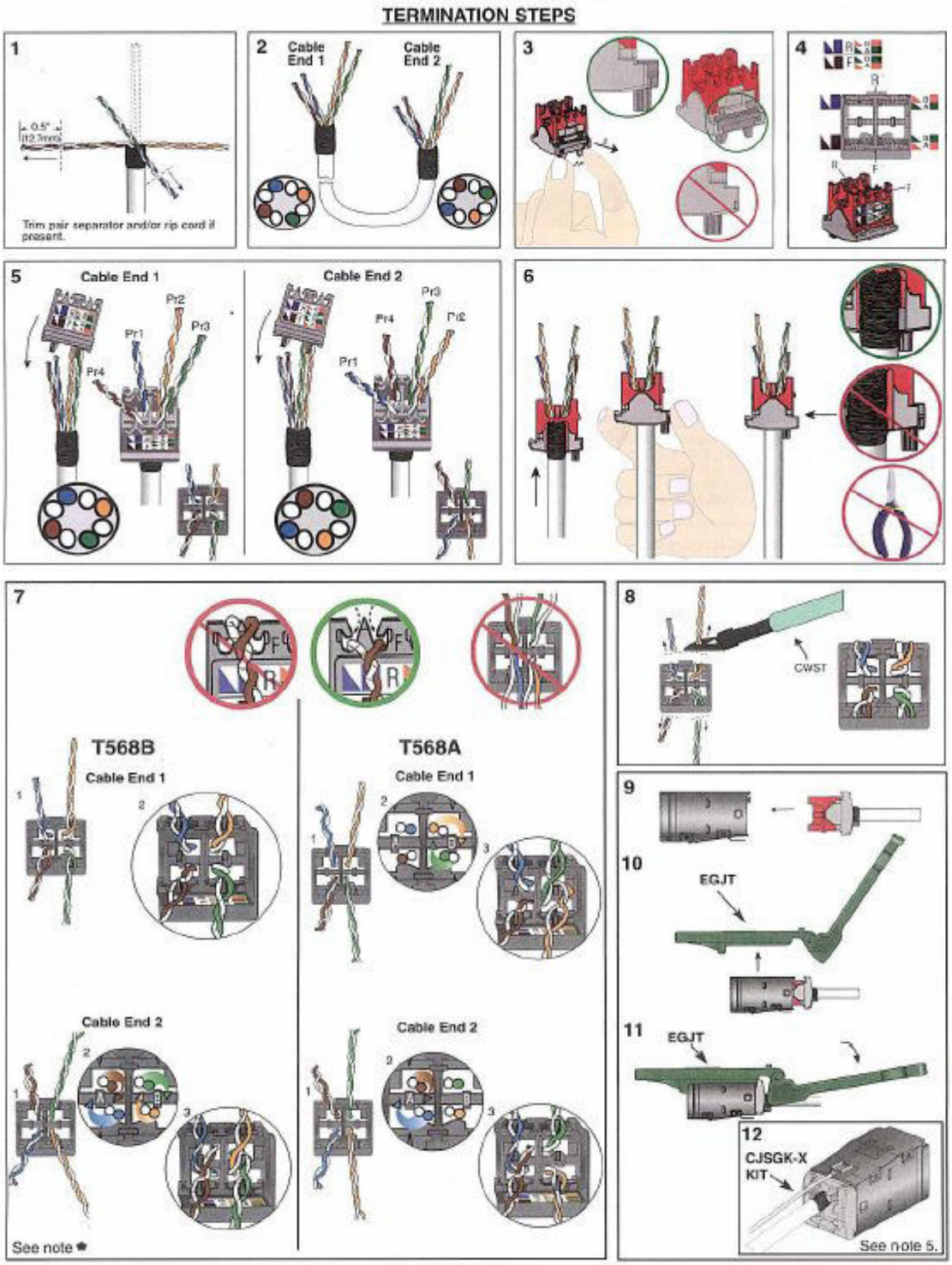

*On cable end 2 for A & B wiring and cable end 1 of A wiring, wrap the designated pairs around the proper center dividing post (A or B) and terminate in the proper location.

For technical and performance information, consult *PANDUIT* Technical Support.

As with all Wiring Accessories, the following statements apply:

1. Never install communications wiring during a lightning storm.
2. Never install communications wiring in wet locations unless the jack is specifically designed for use in wet locations.
3. Never touch uninsulated communications wiring or terminals unless the communication line has been disconnected at the network interface.
4. Use caution when installing or modifying communication wiring.

3.6 Installation of the OPT IQ BNA

This section describes the two procedures to be followed for the safe installation of the Crypto BNA terminal:

- Procedure for installation of the ground frame in the concrete floor (refer to section 3.5.1)
- Procedure for the lifting and placement of the BNA terminal (refer to section 3.5.2)

Important Installation Notes/Remarks

The Crypto BNA must be installed at least 20 cm from the dispenser.

The Crypto BNA must be installed at least 2 metres from the ground-tank air outlet.

Ensure that the base of the BNA is closed in order to prevent the 'chimney' effect i.e. when vapour is sucked through an electrical wiring pipe into the BNA terminal causing a potentially hazardous situation.

Weight of the complete Crypto BNA terminal is 225 kg. Refer to Figure 5 for the dimensions.

Part number of the lifting device is 907389.

3.6.1 GROUND FRAME INSTALLATION PROCEDURE

When working on the site, ensure that the general safety procedures are followed.

INSTRUCTIONS:

1) The ground frame is delivered together with the Crypto BNA housing (Fig 1).
2) Locate the ground frame in the concrete as shown in Fig 2.
3) Locate the pipe for the electrical wiring cables in the centre of the ground frame.
4) Ensure the ground frame is positioned completely horizontal.
5) Ensure the ground frame upper plate is positioned just above the concrete.

Fig 1 - Ground frame is completely welded

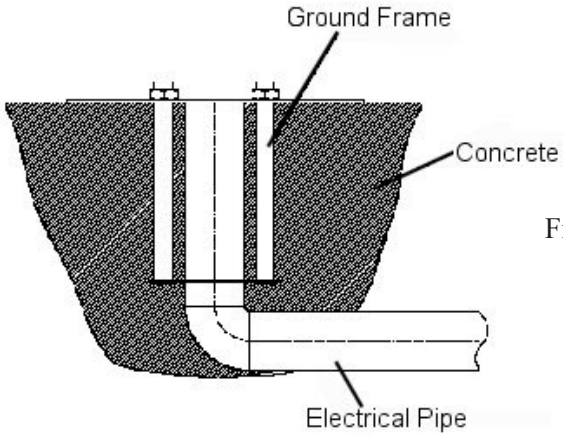

Fig 2 - Position of ground frame and electrical pipe in the concrete

3.6.2 LIFTING AND PLACEMENT PROCEDURE

1) The complete drawer must be removed prior to lifting the BNA terminal.
2) The terminal must be lifted with the door open (Fig 4).
3) Inspect the lifting device for signs of wear or damage.
4) When positioning the metal lifting brackets, use suitable protection to ensure the paintwork will not be damaged.
5) Position part A in the door-opening at the back of the BNA terminal (see Figs 3 and 4).

   Note : Ensure that part A fits correctly in the door-opening.

6) Hold the lifting belt over the unit keeping it flat.

   Note : Do NOT let the belt twist.

7) Position part B in the front opening of the terminal (Figs 3 and 4).

Note : Ensure that part B fits correctly in the front opening.

8) Place the lifting belt onto the lifting hook or fork of the forklift truck.
9) Before lifting the unit clear of the ground, check that the lifting brackets are secure and in the correct position on both sides of the unit.
10) Lift the unit slowly and carefully to maintain good balance.

    Note : Beware of the open door.

11) Locate the BNA terminal directly above the ground frame.
12) Manually position the unit before lowering slowly onto the ground frame.

    Note: Ensure that the lifting belt remains under until the terminal placement is completed.

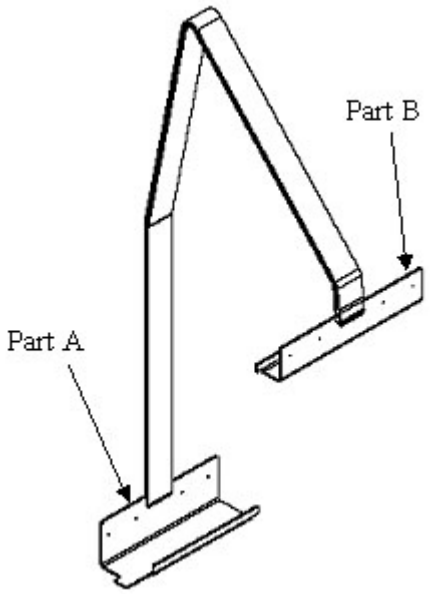

Fig 3 - Position of parts A and B

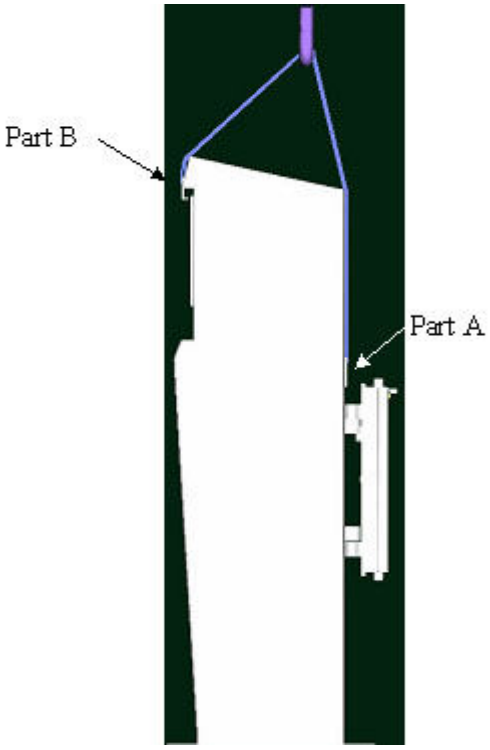

Fig 4 - Lifting with door open

3.7 Installation of the Slimline OPT Pole

This section describes the procedure to be followed for the safe installation of the Crypto VGA island terminal:

When working on the site, ensure that all general safety procedures are followed.

3.7.1 LIFTING AND PLACEMENT PROCEDURE

1) This payment terminal can only be placed safely on the forecourt if all the zoning conditions shown below are met.

   Check with local authorities what conditions apply.

Fourcourt Zoning Applicable: Zone II 0,8M

- The Terminal should be placed on an island ensuring that the bottom of the printer door opening is raised at least 80cm above ground level.
- The electronic box must be connected to an earth cable.
- Firmly fix the EXE cable glands.
- To avoid vapour or liquid intrusion into the pole, seal the cable tube at ground level. To meet ingress protection rating IP67 use a Doyma Curaflex sleeve.

No ATEX Fourcourt Zoning Applicable

- The Terminal can be placed anywhere in a hazardous free zone.
- To avoid vapour or liquid intrusion into the pole, seal the cable tube at ground level. To meet ingress protection rating IP67 use a Doyma Curaflex sleeve.

2) Mark out the 4 positions 130mm apart around the cable entry, drill out and set in chemical anchors. If needed use all 6 available positions for a more secure fitting.

Note : Be aware of the setting time for the anchors in extreme cold conditions.

3) Seal the ground tube around the cables with a Doyma Curaflex sleeve and IP67.

4) Clean the surface around the base and check that the area is level and strong enough to support the pole without any movement. If there is any doubt you can use an equalising cement or a standard Tokheim groundframe.

5) Remove all the transport packaging around the pole.

6) Locate the printer compartment and pull it out on its slide. Remove the printer by unlocking the sliding mechanism and lifting it out.

7) Remove the door from the rear of the pole by sliding it upwards. Lift the pole over the anchors and lower gently, taking care not to damage the threads. If a forklift is available, remove the glands from the front of the pole and use this for lifting it up.

8) When the pole is in position, fix it to the ground using M12 nuts and washers, to achieve the required torque, tightning the nuts with a spanner. Check that there is no movement on the pole when gently shaken.

3.7.2 CONNECTING THE CABLES AND CONNECTORS

1) Pull the power cable through the left hand side gland and connect it to the power switch

2) Pull the Cat 5 cable through the right hand side gland and connect it to the Panduit connector. (Chapter 3.5.1 for details)

Note : Always ensure that the glands are fitted properly. This will help avoid any build up of vapor leaking into the electronic box which could cause problems.

3) If it is still fitted, remove the raingutter from the Crupto VGA terminal as this is not required on the OPT pole.

4) Mate the connectors from the harness to the Crypto VGA and attach the unit to the restraining wire using an M6 lock nut.

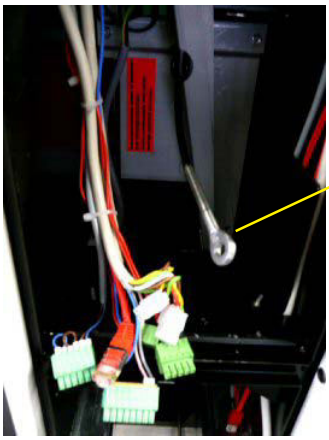

Restraining wire

Note : Make sure all dipswitches are set correctly and the power switch is on.

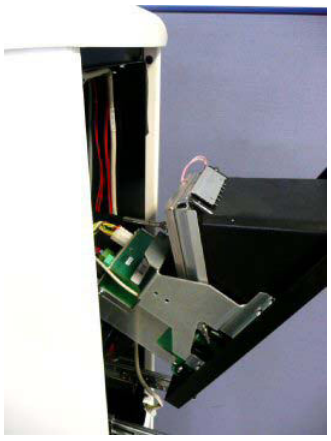

5) Use a spanner to hold the hexagonal section of the restraining wire and tighten the wing nut until the Crypto VGA is securely pressed against the seal.

3.7.3 POWERING UP

1) Locate the main power switch and switch it on. The heater fan will start up and the Crypto VGA should come on.
2) As the Crypto downloads its software from the Fuelposs, it may reboot itself several times before it becomes operational. This is normal and may take up to 20 minutes.
3) Replace the pole door panel by inserting it into its slot and pushing it downwards until it clicks into position.
4) Replace the printer on its drawer rail, slide it forward and click it into position.

5) Using the Crypto VGA on screen menu, check that it changes position as you engage the lock mechanism by closing and then opening the printer door. When all the condions are met, load the paper roll, then close the printer door.

6) Run through some transactions to configure the Crypto VGA.

7) Using a dry cloth, remove any stains or marks from the cladding.

8) The installation of the pole is now complete.

Note : In the event of a power failure, the OPT payment terminal may shut down. Should this happen the electronic lock within the printer compartment may jam closed. For a detailed guide on how to overcome this problem please contact Tokheim SEBU.(Systems & Electronics Business Unit)

3.7.4 BILL OF MATERIAL

- **944186-001:** ***OPT POLE***

  - **944243:** ***OPT POLE STRUCTURE PARTS ASSY***
    - 944207-DEC: *OPT POLE STRUCTURE SKIN (RAL 9010)*
      - 944207: *OPT POLE STRUCTURE SKIN*
    - 944251:
    - 903709-001:
    - 900008-021
    - 900013-003
    - 900026-001: RIVET DRIVE
    - **944263-DEC: OPT POLE BASE FRAME ASSY**

  - **944240:** ***OPT POLE ELECTRONIC BOX***
    - 944250: OPT POLE SEAL COOLING FAN
    - 907117: MINI JACK TX-5E PANDUIT
    - 944205: OPT POLE TOP COVER WHITE RAL 9010
      - 944205 : OPT POLE TOP COVER
    - 944187: OPT POLE ELECTRONIC BOX ASSY
    - 900013-003: NUT HEX SELF LOCK M6
    - 900013-001: NUT HEX SELF LOCK M4
    - 900008-016: *WASHER PL M4*
    - 900017-022: SCREW HSHC M4 X10
    - 900017-022: SCREW HSHC M4 X10
    - 900362-001: PE M16X1,5 EEXE CAP
    - 901990-001: PE M25X1,5 6/13MM H
    - 903160-001: U-BOLT 3/4"
    - 900013-004: NUT HEX SELF LOCK M8
    - 940008: PULL RELIEF 'BETTERMANN'
    - 900088-002: NUT HEX M25 X 1,5 (BARTEC)
    - 900088-005:NUT HEX M16 X 1.5 (BARTEC)
    - 942686: FAN ASSY CRYPTO-VG
    - **9200117545**
    - **944235: OPT POLE PRINTER RAIL BRACKET**
      - **944248: OPT POLE LOCK ASSEMBLY**
        - 944253: OPT POLE COVER LOCK MECHANISM ASSY
        - 944249: OPT POLE LOCK BRK STD ASSY
        - 945879-001: COIL LOCK CRYPTO VGA OPT L=200
        - 9240000073
        - 9220117457
        - 905232: EBERHARD ROTARY LATCH
        - 905213: NL LOCK LINK
        - 945880-001: CRYPTO VGA ALARMS SLIM L=200MM
        - 900013-002: NUT HEX SELF LOCK M5
        - 900013-001: NUT HEX SELF LOCK M4
        - 9000012-001: NUT HEX PREV TORQUE M3
        - 900009-001: WASHER SERR LOCK EXT M4
        - 900008-010: WASHER PL M3
        - 900007-003: SCREW SCH M4X8
      - 944238: OPT POLE PRINTER RAIL BRACKET ST ASSY
      - 944202: TELESCOPIC DRAWER RAIL
      - 940008: PULL RELIEF 'BETTERMANN'
      - 900013-001: NUT HEX SELF LOCK M4
      - 900007-003: SCREW SCH M4X8
    - **944260: OPT POLE POWERSWITCH ASSY**
      - 944259: OPT Pole Power switch cover std assy
      - 944257: Main switch 20A 415VA
      - 940008: Pull relief 'Bettermann'
      - 909416-003: Endplate orange for clamp -001
      - 909416-002: Clamp 4 x 0.13 - 2.50mm gn/ye
      - 900013-001: Nut Hex Self Lock M4
      - 945887-001: Power cable opt Sliml l= 600mm

- **944273: OPT pole centreplate component assy**
  - 944247: OPT Pole crypto pulling wire
  - 944241: CVGA mains power
    - 909416-003: Endplate orange for clamp -001
    - 909416-002: Clamp 4 x 0.13 - 2.50mm gn/ye
    - 909416-001: Endplate orange for clamp -001
    - 903482: FUSE HOLDER FOR 6,3x32 FUSE
    - 901432-001: Rail TS 35 l=75
    - 909416-006: End bracket beige
    - 903483-003: FUSE HBC 6,3 X 32 3.15A
    - 945447-001: Crypto vga Power cosel l=400mm
    - 904228-002: Assy Wire black 1.5 mm² L=200
    - 944754: Fuse holder for 6.3 x 32 Fuse
    - 944876: End Plate, Fuse Terminal
  - 944237: OPT Pole heat shield
  - 944226: OPT Pole centreplate bkt assy
  - 904078-001: wing nut m6
  - 901454-001: PCB/OPT/MPSU/COSEL LEB150F
  - 900711-003: Spacer Thr Hex MF M3x12x8x8
  - 900013-006: Nut Hex Self Lock M3
  - 900013-003: Nut Hex Self Lock M6
  - 900013-001: Nut Hex Self Lock M4
  - 900009-004: Washer Serr Lock Ext M6
  - 940162: heater DBK 300W
  - 945218-001: C VGA 24V Cable OPT O l=750mm
- 944209: Cable tie clip
- 909695-002: Printer cable housing l=1100
- 945881-001: Cable coil/switch l = 1300

- **944251: Screw hexagonal extra flathead**
- **900016-004: Screw HFHSL M6x16**
- **944233: OPT pole printer component assy**
  - 907363: Printer Control Board DUR7002
  - 907360: Printerhead Citizen LT-281
  - 9210013337:
  - 907436: Assy flatcable 34p OPT printer
  - 901934-001: Push button black
  - 907779: Magnet cover
  - 942679: Paper low detection CVGA
  - 900092: Nozzle Switch Magnet
  - 908942: Mouled paper roll axe
  - 900011-009: Nut hex M2
  - 901322-001: Screw SPH M2x12
  - 5566000113: Adhesive magnet
  - 906691-006: paper roll Ø 200
  - 945199: Raincover Crypto-VGA
  - 941849: Printer frame weldassy
  - 945242: Printer door
  - 941927: Printer + PCB bracket
  - 944232: OPT Pole printer door seal
  - 944234: OPT Pole printer door
  - 909694-001: Printer cable CV 250 mm
  - 900053-006: Screw Torx Thr Form BH M4x8
  - 945550: Sticker Tokheim TC 7346
  - 909730: Seal printer door Crypto-vga
  - 900017-016: Screw HSHC M3x6
  - 900017-008: Screw HSHC M4x8

- **944208-DEC: OPT Pole front door panel RAL 9010**
  - 944208: **OPT Pole front door panel**

3.7.5 EXPLODED DRAWING

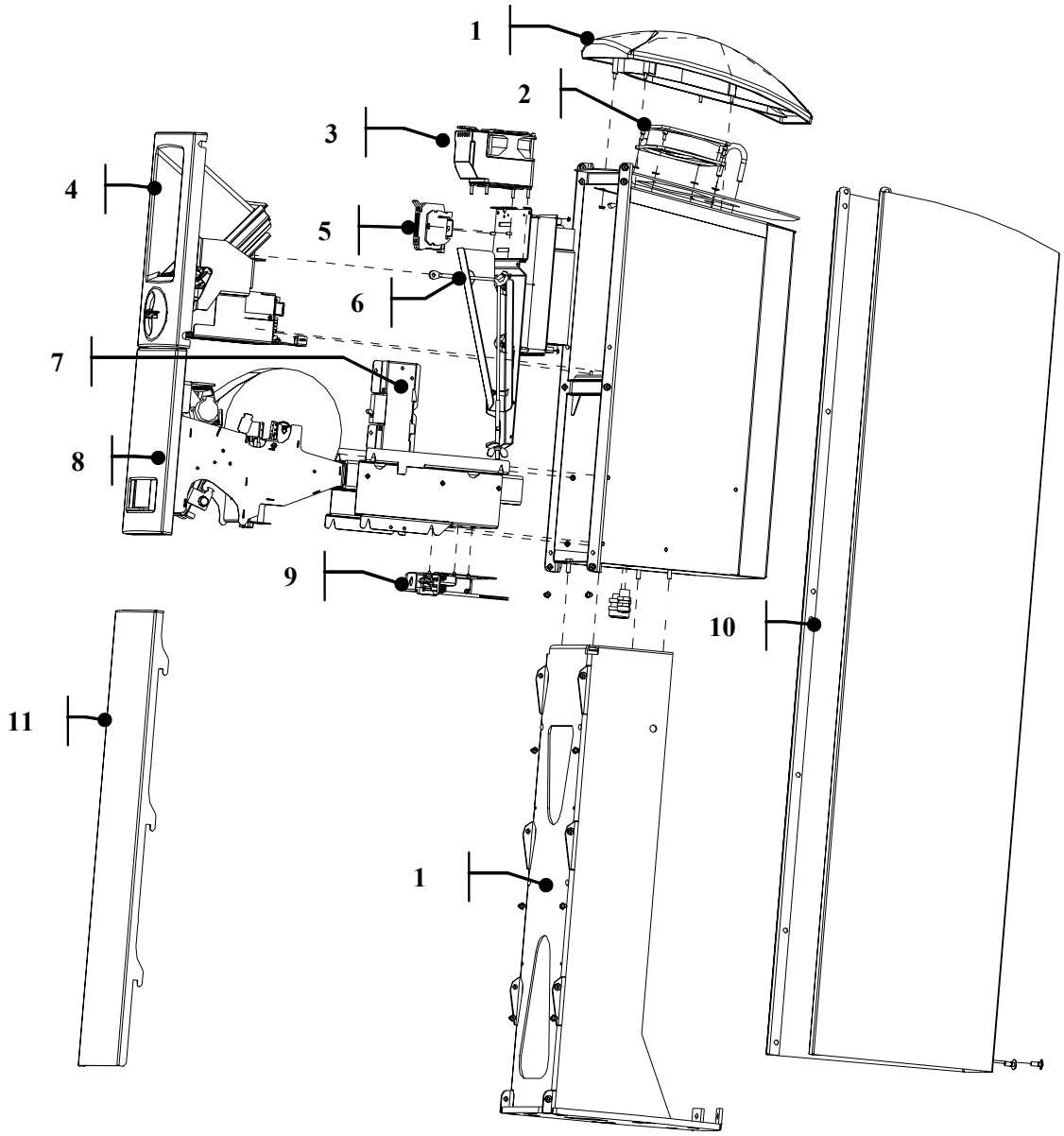

1	944205	OPT Pole top cover	
2	942686	Fan assy Crypto-VGA	Ass. sur Crypro VGA
3	909214-002	Heater DBK	Chauffage DBK
4	943269	CRYPTO VGA Hardware assy	
5	944241	CVGA mains pow er	
6	944247	OPT Pole crypto pulling w ire	
7	944260	OPT Pole Pow ersw itch assy	
8	944233	OPT Pole pinter component assy	
9	944248	OPT pole lock assembly	
10	944207	OPT Pole Structure skin	
11	944208	OPT Pole front door panel	
12	944263	OPT Pole Base frame assy	

This page is intentionally blank

CONTENTS

4 CRYPTO VGA WIRING DIAGRAMS 4-2
4.1 Wiring Overview - Crypto VGA 4-2
4.2 Wiring Overview - Crypto VGA OPT I C 4-3
4.3 Wiring Overview - CVGA OPT Mains Power 4-4

4 CRYPTO VGA WIRING DIAGRAMS

4.1 Wiring Overview - Crypto VGA

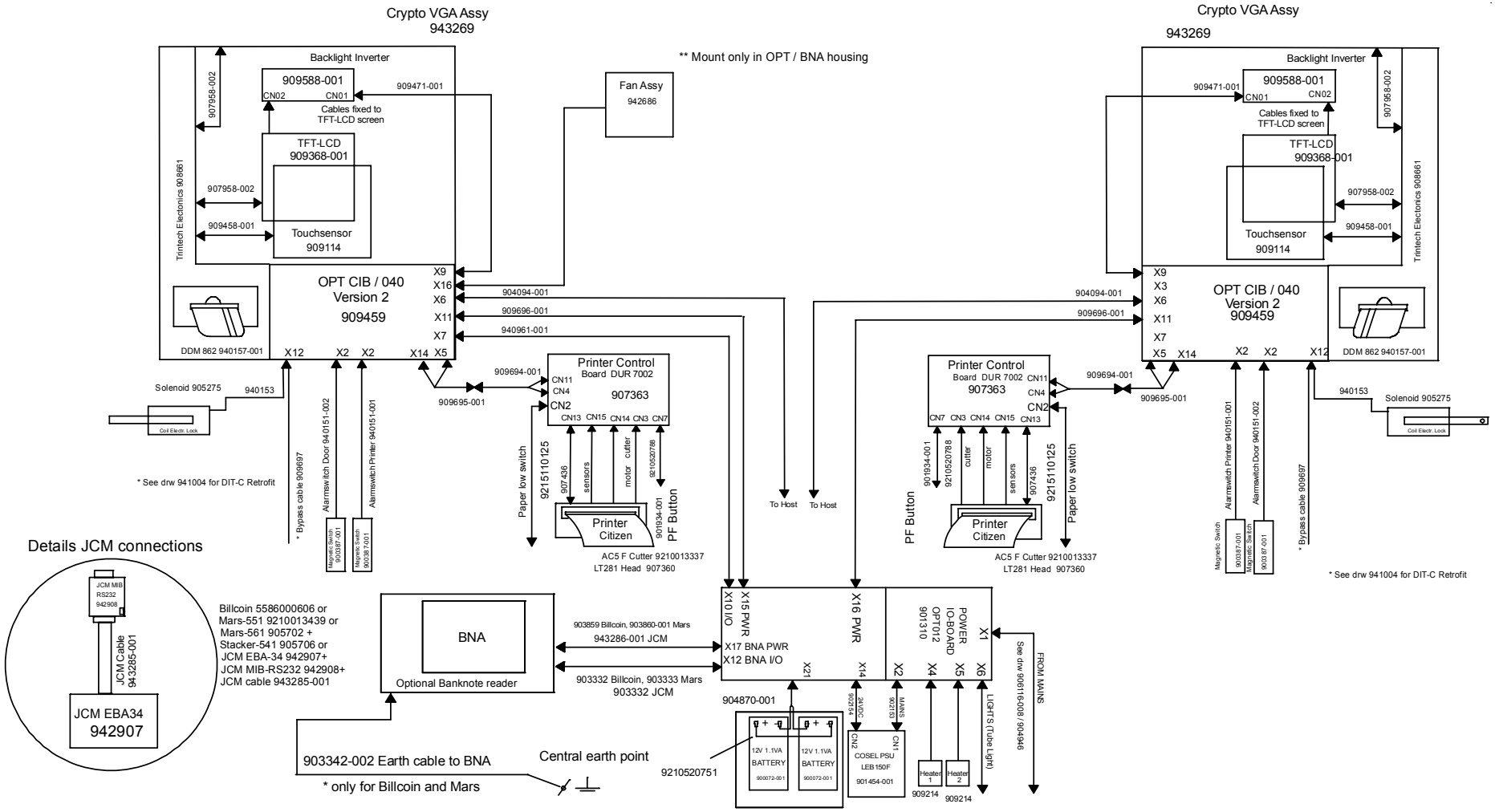

4.2 Wiring Overview - Crypto VGA OPT I C

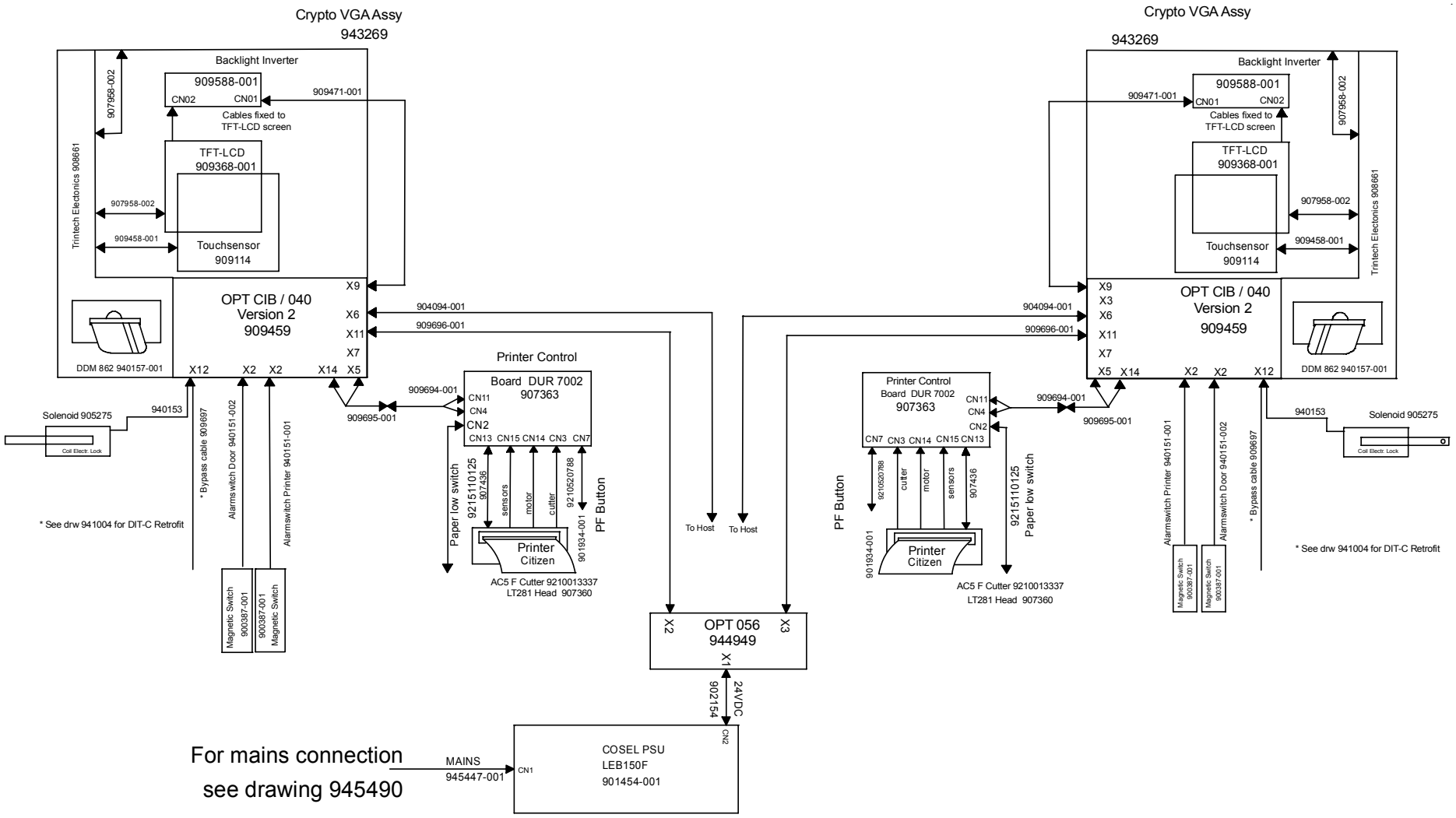

4.3 Wiring Overview - CVGA OPT Mains Power

Mains Connection
230 V +10% -15% I max 6A 50 / 60 Hz

The power cable to the crypto VGA
must be min 3 x 1,5mm² and double insulated.

The building fuse must be 16A.

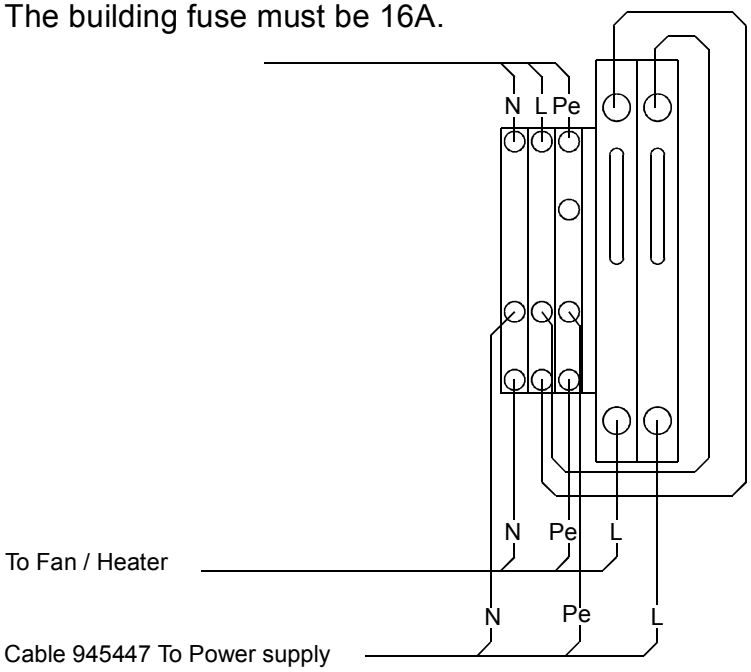

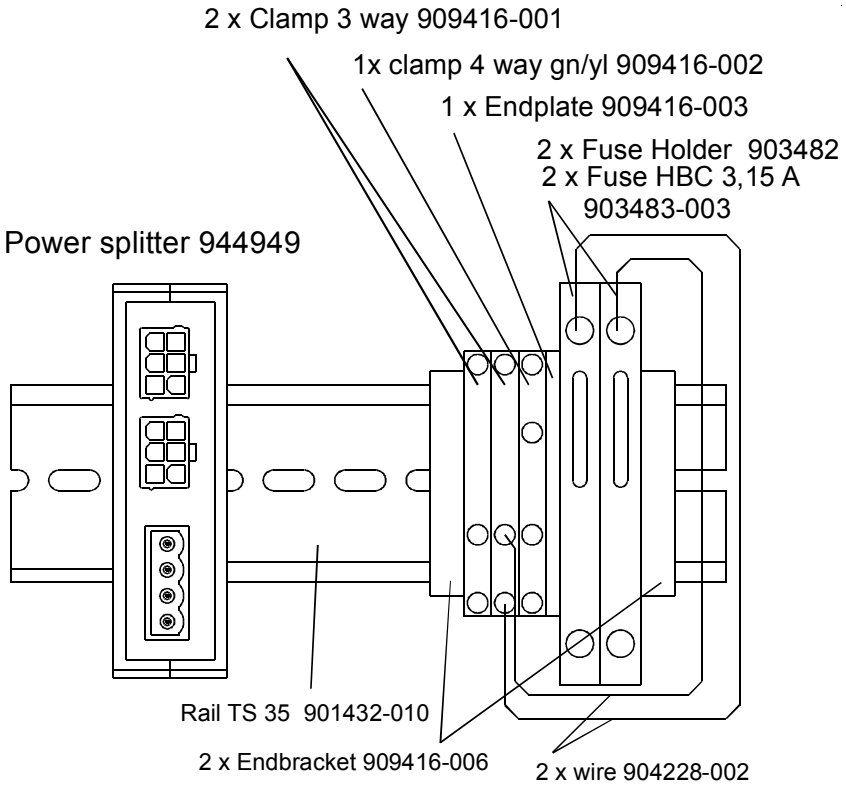

CONTENTS

5 CRYPTO VGA PARTS LIST 5-2
5.1 Crypto VGA OPT Assembly 5-2
5.2 Crypto VGA BNA Assembly 5-4
5.2.1 Crypto VGA BNA Cable Gutter Assembly 5-8
5.3 Crypto VGA DIT Assembly 5-10
5.4 Crypto VGA DIT PSU Assembly 5-12
5.5 CVGA PSU Assembly 5-14
5.6 Crypto VGA Panduit Assembly 5-16
5.7 OPT Mains Power Rail Assembly 5-18
5.8 Crypto VGA PSU & Lamp Assembly 5-20
5.9 Crypto VGA Payment Assembly 5-22
5.10 Crypto VGA Printer Assembly 5-24
5.11 Crypto VGA Bracket Assemblies 5-26
5.11.1 Single-Sided 5-26
5.11.2 Double-Sided 5-28
5.12 Crypto VGA Lock Assembly 5-30
5.13 Euro Lock Assembly 5-32
5.14 Recommended Spare Parts List 5-34

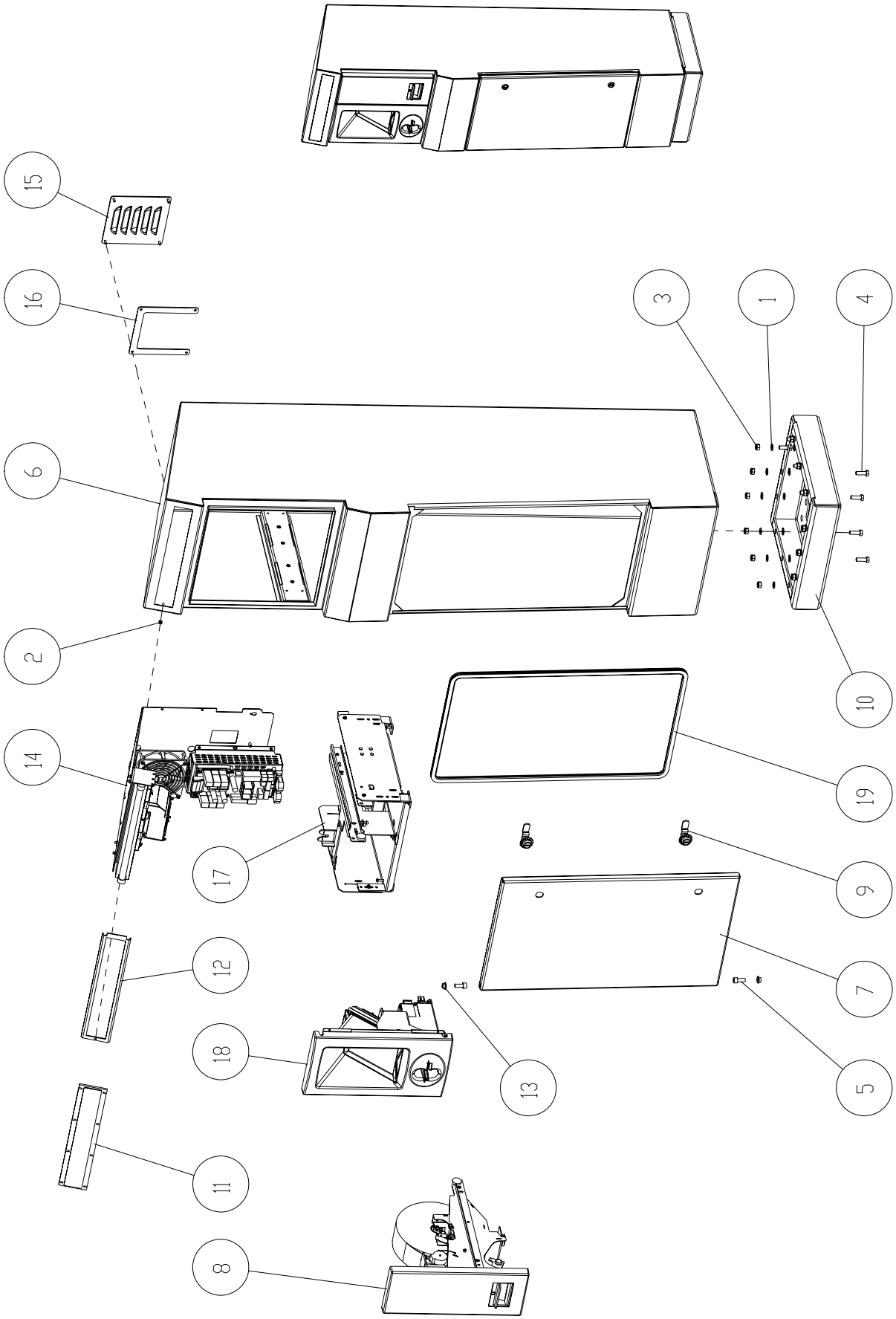
15
16
6
2
14
12
18
11
8
17
13
3
1
4
10
19
9
7
5

5 CRYPTO VGA PARTS LIST

5.1 Crypto VGA OPT Assembly

Item No	Description	Désignation Français	Part No	Comments
1	Washer PL M8	Rondelle PL M8	900008-013	
2	Nut Hex Prev Torque M4	Ecrou Autobloquant M4	900012-004	
3	Nut Hex Prev Torque M8	Ecrou Autobloquant M8	900012-005	
4	Screw HH M8 x 120 StZn 8.8	VIS HH HH M8 x 120 StZn 8.8	900015-012	
5	Screw HSHC M8x20	VIS CHC M8 x 20	900017-002	
6	NL CCT weld Assy	NL CCT Weld Assy	905228	
7	NL CCT Door	NL CCT Door	905231	
8	Printer Drawer Assy	Printer Drawer Assy	-	Refer to Crypto VGA Printer drawing
9	OPT Eurolock Standard Assy	OPT Eurolock Standard Assy	-	Refer to Lock drawing
10	Bottom MPT Economy	Fond MPT Economie	9220115555	
11	OPT - BCT Window Blank	OPT - BCT Blanc de Fenetre	9220130520	
12	DIT Lighting Bracket	DIT Eclairage Encadrer	9400021080	
13	Door Spacer OPT MD	Porte Spacer OPT MD	9400022084	
14	PSU Plate CCT/BCT CVGA Assy	PSU Plate CCT/BCT CVGA Assy	-	Refer to Cypto PSU & Lamp drawing
15	Grating Cover with Louvres	Grating Cover with Louvres	942390	
16	Seal Louvres OPT	Seal Louvres OPT	942436	
17	CCT Bracket Crypto-VGA	CCT Bracket Crypto-VGA 1S	-	Refer to Crypto Bracket drawings
18	Crypto VGA Payment Assy	Crypto VGA Payment Assy	-	Refer to Crypto Payment drawing
19	Rubber Seal BCT	Caoutchouteux Cacheter BCT	9700215809	

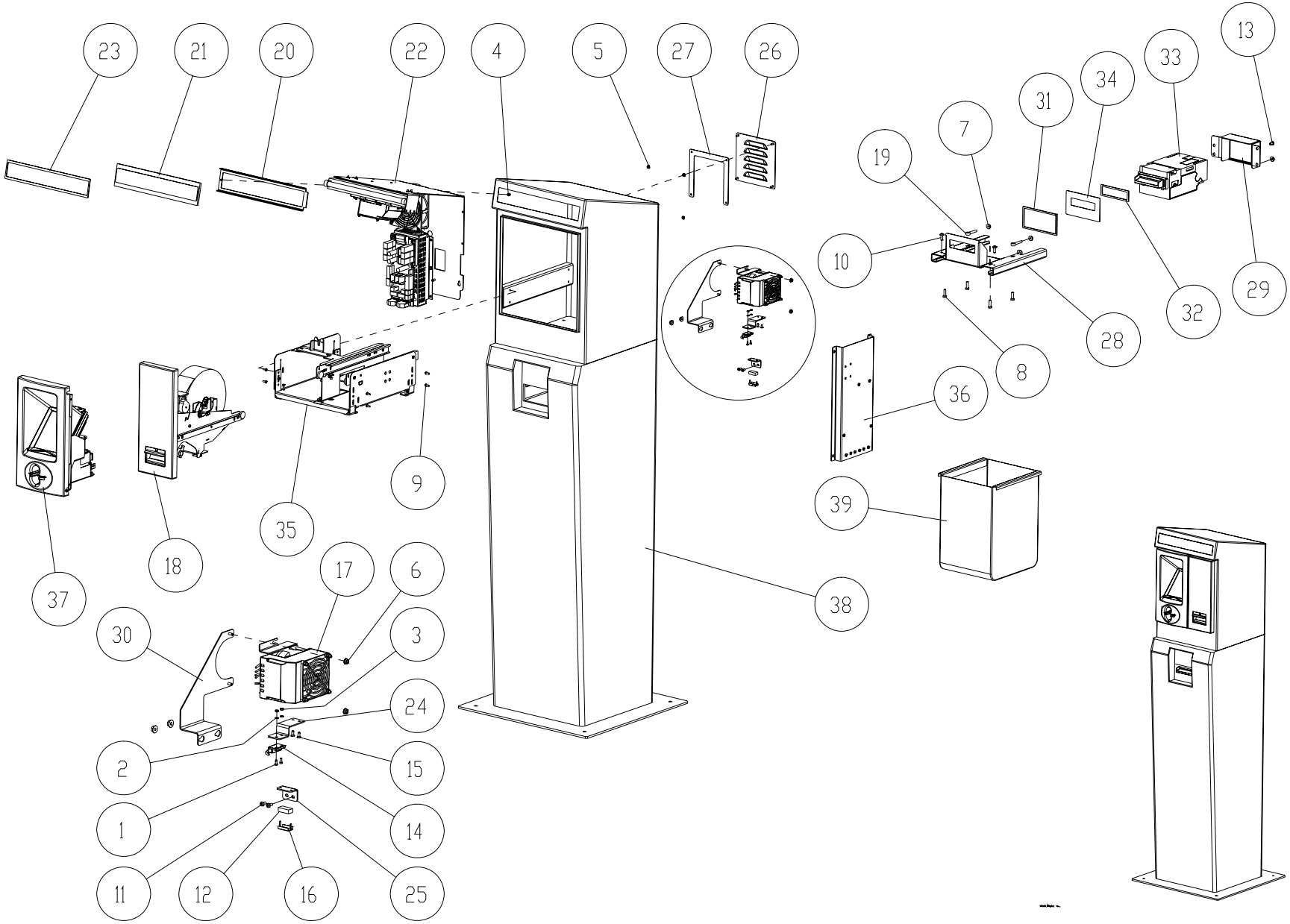
23
21
20
22
4
5
27
26
13
33
34
31
7
19
10
29
32
28
8
36
39
38
9
35
18
37
17
6
30
3
24
2
15
1
14
11
12
16
25

5.2 Crypto VGA BNA Assembly

Item No	Description	Désignation Français	Part No	Comments
1	Screw SCH M3x8	Vis CS M3x8	900007-008	
2	Washer Serr Lock Ext M3	Rondelle a Dents DEC M3	900009-006	
3	Nut Hex M3	Ecrou H M3	900011-008	
4	Nut Hex Prev Torque M4	Ecrou Frein M4	900012-004	
5	Nut Hex Self Lock M4	Ecrou Bride Autobloquant M4	900013-001	
6	Nut Hex Self Lock M5	Ecrou Bride Autobloquant M5	900013-002	
7	Nut Hex Self Lock M6	Ecrou Bride Autobloquant M6	900013-003	
8	Screw HH M6x20	Vis H M6x20	900015-010	
9	Screw CRRCH M4x10	Vis CBLZ M4x10	900052-003	
10	Screw Torx Thr Form BH M6x16	Vis Torx AutoF TCBL Tril M6x16	900053-002	
11	Screw CRRCHTF M4x10	Autotara Cyl Bomb Emp Cru M4x10	900078-004	
12	Nozzle Switch Magnet	Aimant Interrupteur Injecteur	900092	
13	M6x10 Sealing Screw	M6x10 Scellant Vis	901551-002	
14	Alarm Sensor Address 2	Capteur Alerte Sensor Add 2	903410-002	
15	Screw CRCTH M4x10	Vis ATFRFE M4x10	904062-001	
16	Magnet Holder	Magnet Holder	907779	
17	DBK Heater 350W	Chauffage DBK 350W	909214-001	
18	Printer Drawer Crypto Assy	Printer Drawer Crypto Assy	-	Refer to Crypto VGA Printer drawing
19	Eye Bolt M6x40	Corps de Boulon a Oeil M6x40	909915-001	
20	Lighting Bracket DIT	Eclairage Encadrer DIT	9400021080	
21	OPT BCT Window Blank	OPT BCT Blanc de Fenetre	940288	
22	PSU Plate CCT/BCT CVGA Assy	PSU Plate CCT/BCT CVGA Assy	-	Refer to PSU & Lamp drawing
23	Seal Window CCT	Joint de Fenetre CCT	940625	
24	IT-BCT Door Sensor Bkt	IT-BCT Door Sensor Bkt	941846	

(Cont.)

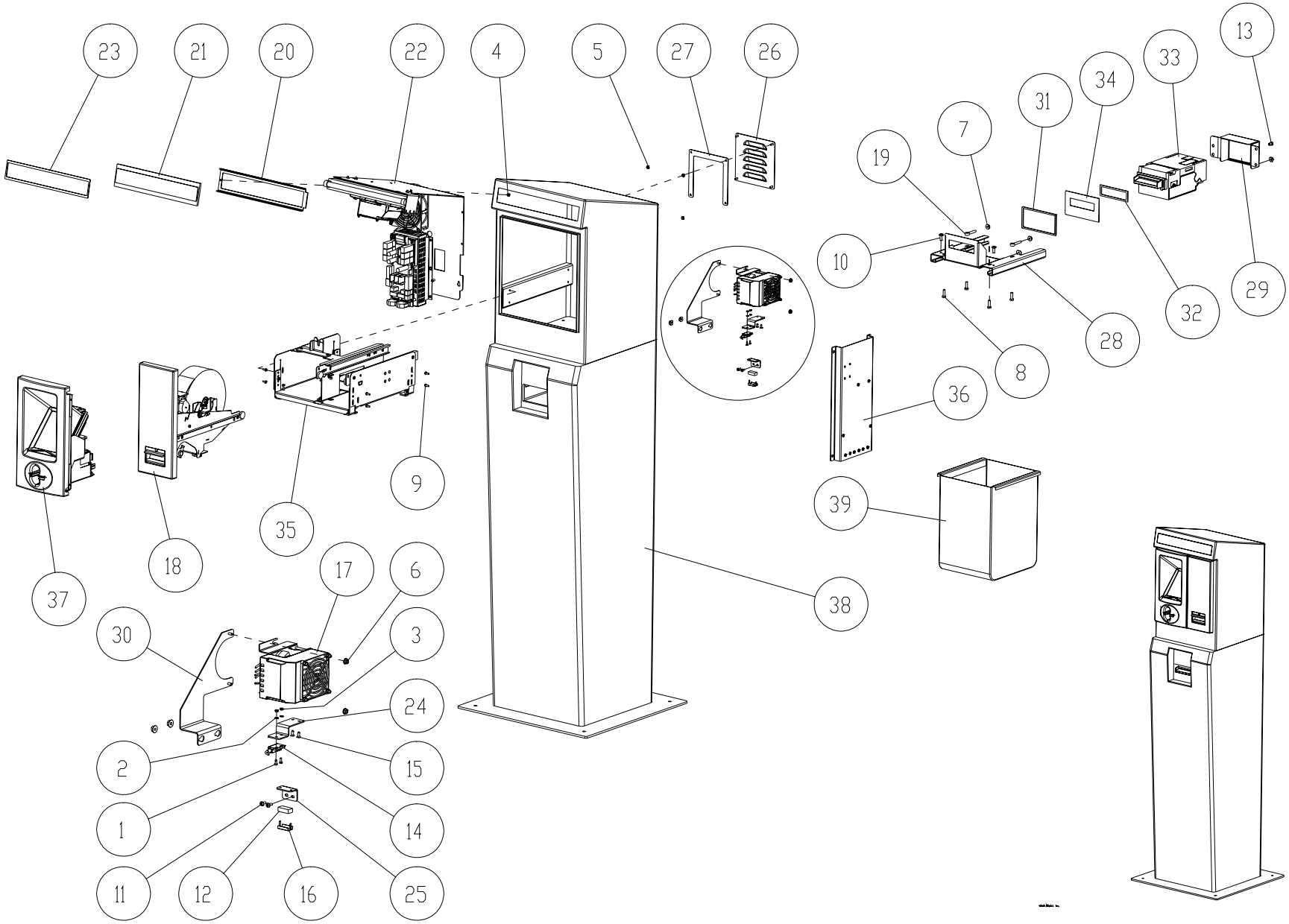
23
21
20
22
4
5
27
26
13
33
34
31
7
19
10
29
32
28
8
36
9
35
18
37
39
38
17
6
30
3
24
2
15
1
14
11
12
16
25

5.2 Crypto VGA BNA Assembly (Cont.)

Item No	Description	Désignation Français	Part No	Comments
25	IT-BCT Door Magnet Bracket	IT-BCT Door Magnet Bracket	941847	
26	Grating Cover with Louvres	Grating Cover with Louvres	942390	
27	Seal Louvres OPT	Seal Louvres OPT	942436	
28	Money-bag / Face Plate JCM	Money-bag / Face Plate JCM	942704	
29	Lock Bracket JCM	Lock Bracket JCM	942809	
30	Bracket DBK Heater	Bracket DBK Heater	942814	
31	Seal Bezel JCM	Seal Bezel JCM	942872	
32	Seal 2 Bezel JCM	Seal 2 Bezel JCM	942873	
33	Cash Reader JCM - Euro	Cash Reader JCM - Euro	942907-001	
	Cash Reader JCM - Euro/Switzerland	Cash Reader JCM - Euro/Switzerland	942907-002	
	Cash Reader JCM - Switzerland	Cash Reader JCM - Switzerland	942907-003	
	Cash Reader JCM - Romania	Cash Reader JCM - Romania	942907-004	
	Cash Reader JCM - Denmark	Cash Reader JCM - Denmark	942907-005	
	Cash Reader JCM - Poland	Cash Reader JCM - Poland	942907-006	
	Cash Reader JCM - GBP/Euro	Cash Reader JCM - GBP/Euro	942907-007	
	Cash Reader JCM - Nor/Swe/Dnk/Eur2	Cash Reader JCM - Nor/Swe/Dnk/Eur2	942907-008	
34	Face Plate JCM	Face Plate JCM	943086	
35	CCT Bracket Crypto VGA	CCT Bracket Crypto VGA	-	Refer to Crypto Bracket drawing
36	BCT Cable Gutter Assy	BCT Cable Gutter Assy	-	Refer to BNA Cable Gutter drawing
37	Crypto VGA Assy	Crypto VGA Assy	-	Refer to Crypto Payment drawing
38	BNA Assembly	BNA Assembly	-	
39	Money Bag	Money Bag	-	

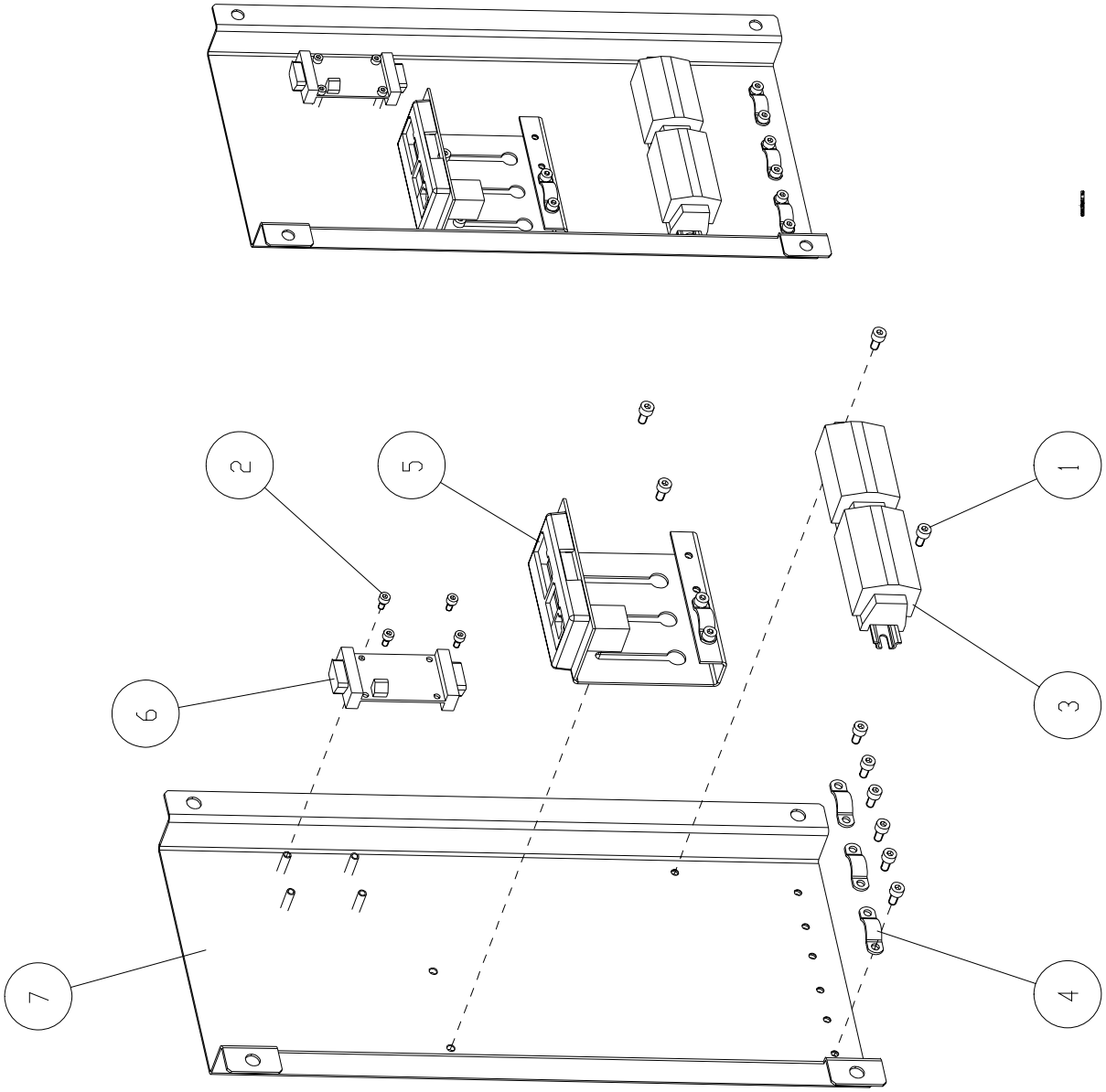
1
2
3
4
5
6
7

5.2.1 CRYPTO VGA BNA CABLE GUTTER ASSEMBLY

Item No	Description	Désignation Français	Part No	Comments
1	Screw HSHC M4x8	Vis CHC M4x8	900017-008	
2	Screw HSHC M3x6	Vis CHC M3x6	900017-016	
3	Connection Block OPT	Raccord Bloc OPT	903603	
4	Pull Relief "Betterman"	Tirez le Soulagement "Betterman"	940008	
5	Panduit 1x CAT5 Assy	Panduit 1x CAT5 Assy	-	Refer to Crypto Panduit drawing
6	JCM RS232 Converter PCB	JCM RS232 Converter PCB	942908	
7	BCT Cable Gutter	BCT Cable Gutter	943179	

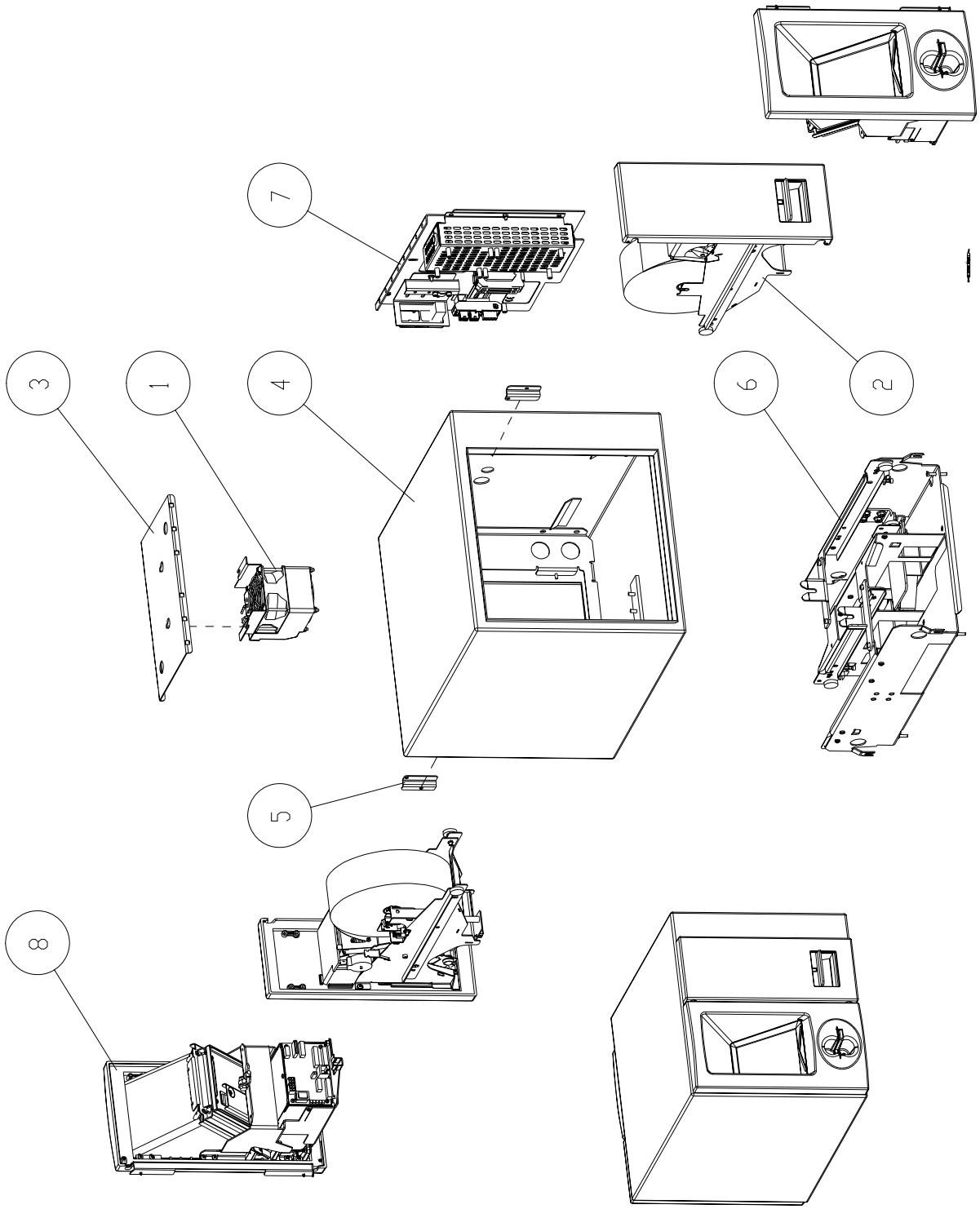
3
1
4
7
6
2
5
8

5.3 Crypto VGA DIT Assembly

Item No	Description	Désignation Français	Part No	Comments
1	DBK Heater 350W	Chauffage DBK 350W	909214-2001	
2	Printer Drawer Crypto Assy	Printer Drawer Crypto Assy	-	Refer to Crypto VGA Printer drawing
3	Cable Gutter	Cable Gutter	909759	
4	DIT-C MD Housing Weld Assy	DIT-C MD Housing Weld Assy	9400023106	
5	Printer Cable Bracket CVGA	Printer Cable Bracket CVGA	940762	
6	Bracket Crypto-VGA Assy 1S Bracket Crypto-VGA Assy 2S	Bracket Crypto-VGA Assy 1S Bracket Crypto-VGA Assy 2S	- -	Refer to Crypto Bracket drawings
7	PSU DIT-C CVGA Assy	PSU DIT-C CVGA Assy	-	Refer to Crypto DIT PSU drawing
8	Crypto-VGA Hardware Assy	Crypto-VGA Hardware Assy	-	Refer to Crypto Payment drawing

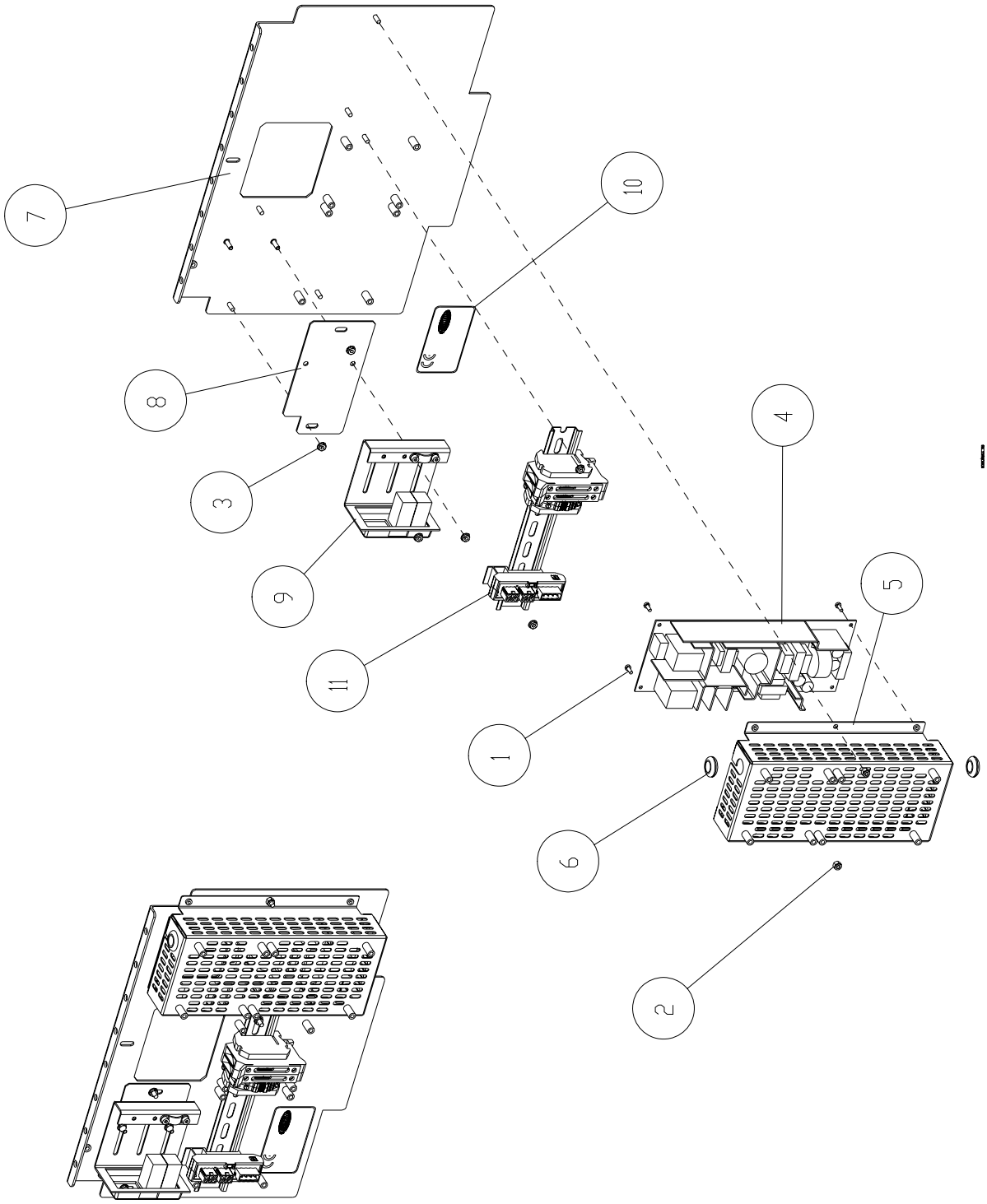
7
8
3
9
11
10
4
5
1
6
2

5.4 Crypto VGA DIT PSU Assembly

Item No	Description	Désignation Français	Part No	Comments
1	Screw SCH M3x8	Vis CS M3x8	900007-008	
2	Nut Hex Prev Torque M4	Ecrou Frein M4	900012-004	
3	Nut Hex Self Lock M4	Ecrou Bride Autobloquant M4	900013-001	
4	PCB/OPT/MPSU/COSEL LEB150F	PCB/OPT/MPSU/COSEL LEB150F	901454	
5	Cosel OPT PSU Cover	Cosel OPT PSU Couvrir	902078	
6	Cable Protector 12.5x20.5x16x1.2x7	Cable Protecteur 12.5x20.5x16x1.2x7	902080-001	
7	PSU Plate DIT-C	PSU Plaquer DIT-C	902611	
8	Conversion Plate RJ45	Conversion Plate RJ45	909758	
9	Panduit 2xCAT5 Assy	Panduit 2xCAT5 Assy	-	Refer to Crypto Panduit drawing
10	CE Sticker Crypto VGA	CE Sticker Crypto VGA	945217	
11	CVGA OPT Mains Power	CVGA OPT Mains Power	-	Refer to OPT Mains Power Rail

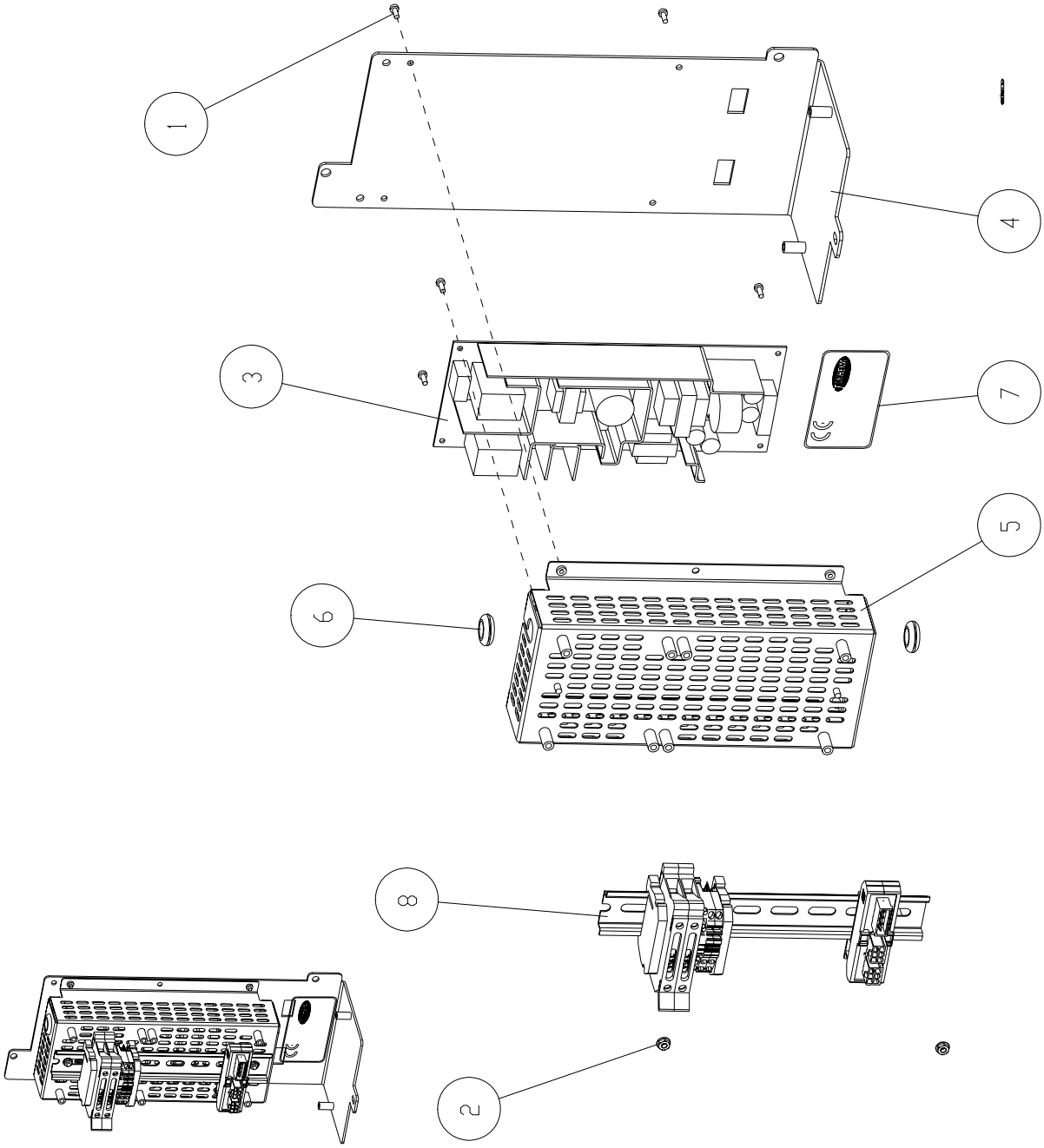
1
4
3
7
5
6
8
2

5.5 CVGA PSU Assembly

Item No	Description	Désignation Français	Part No	Comments
1	Screw SCH M3x8	Vis CS M3x8	900007-008	
2	Nut Hex Self Lock M4	Ecrou Bride Autobloquant M4	900013-001	
3	PCB/OPT/MPSU/COSEL LEB150F	PCB/OPT/MPSU/COSEL LEB150F	901454	
4	DIT PSU Bracket	DIT PSU Encadrer	902076	
5	Cosel OPT PSU Cover	Cosel OPT PSU Couvrir	902078	
6	Cable Protector 12.5x20.5x16x1.2x7	Cable Protecteur 12.5x20.5x16x1.2x7	902080-001	
7	CE Sticker Crypto VGA	CE Sticker Crypto VGA	945217	
8	CVGA OPT Mains Power	CVGA OPT Mains Power	945490	

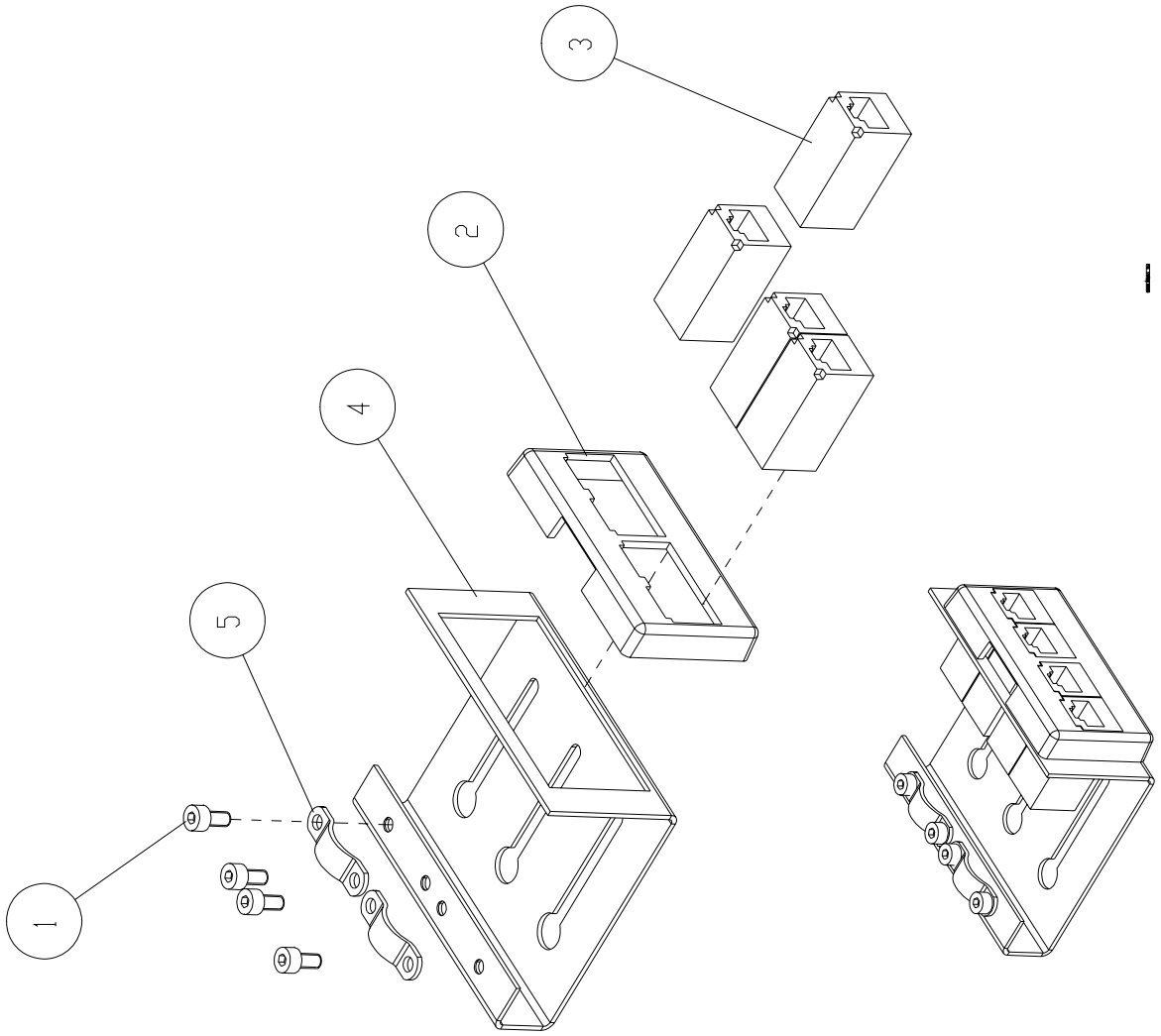
1
5
4
2
3

5.6 Crypto VGA Panduit Assembly

Item No	Description	Désignation Français	Part No	Comments
1	Screw HSHC M4x8	Vis CHC M4x8	900017-008	
2	4 Pos.mini Face Plate	4 Pos.mini Face Plate	907116	
3	Coupler Cat 5	Coupler Cat 5	907117	
4	Panduit Bracket	Panduit Bracket	907122	
5	Pull Relief "Betterman"	Tirez le Soulagement "Betterman"	940008	

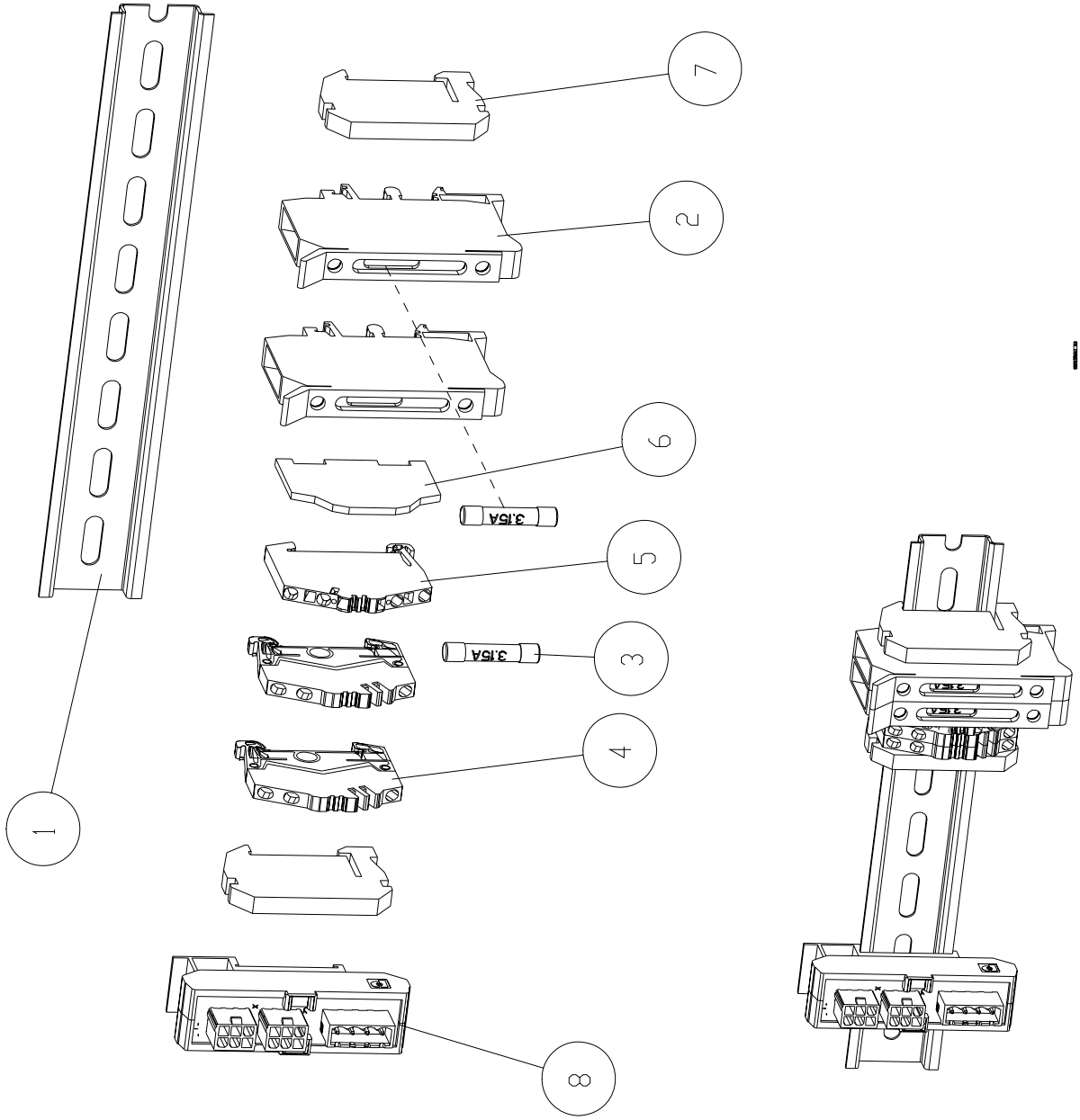
1
4
3.15A
3
5
3.15A
6
2
7
8

5.7 OPT Mains Power Rail Assembly

Item No	Description	Désignation Français	Part No	Comments
1	Rail TS 35 l=215	Rail de Bornier TS 35 l=215	901432-010	
2	Fuse Holder for 6.3x32 Fuse	Porte Fusible Section 6.3x32	903482	
3	Fuse 3.15A	Fusible 3.15A	903483-003	
4	Clamp 3x0.13 - 2.50mm Beige	Borne 3x0,13 - 2.50mm Beige	909416-001	
5	Clamp 3x0.13 - 2.50mm Gn/Ye	Borne 3x0,13 - 2.50mm Vert/Jaune	909416-002	
6	End Plate Orange	Plaque Separation Ornage	909416-003	
7	End Bracket Beige	Extremite Stop Beige	909416-006	
8	PCB/OPT056/PSB/Power Splitter	PCB/OPT056/PSB/Power Splitter	944949	

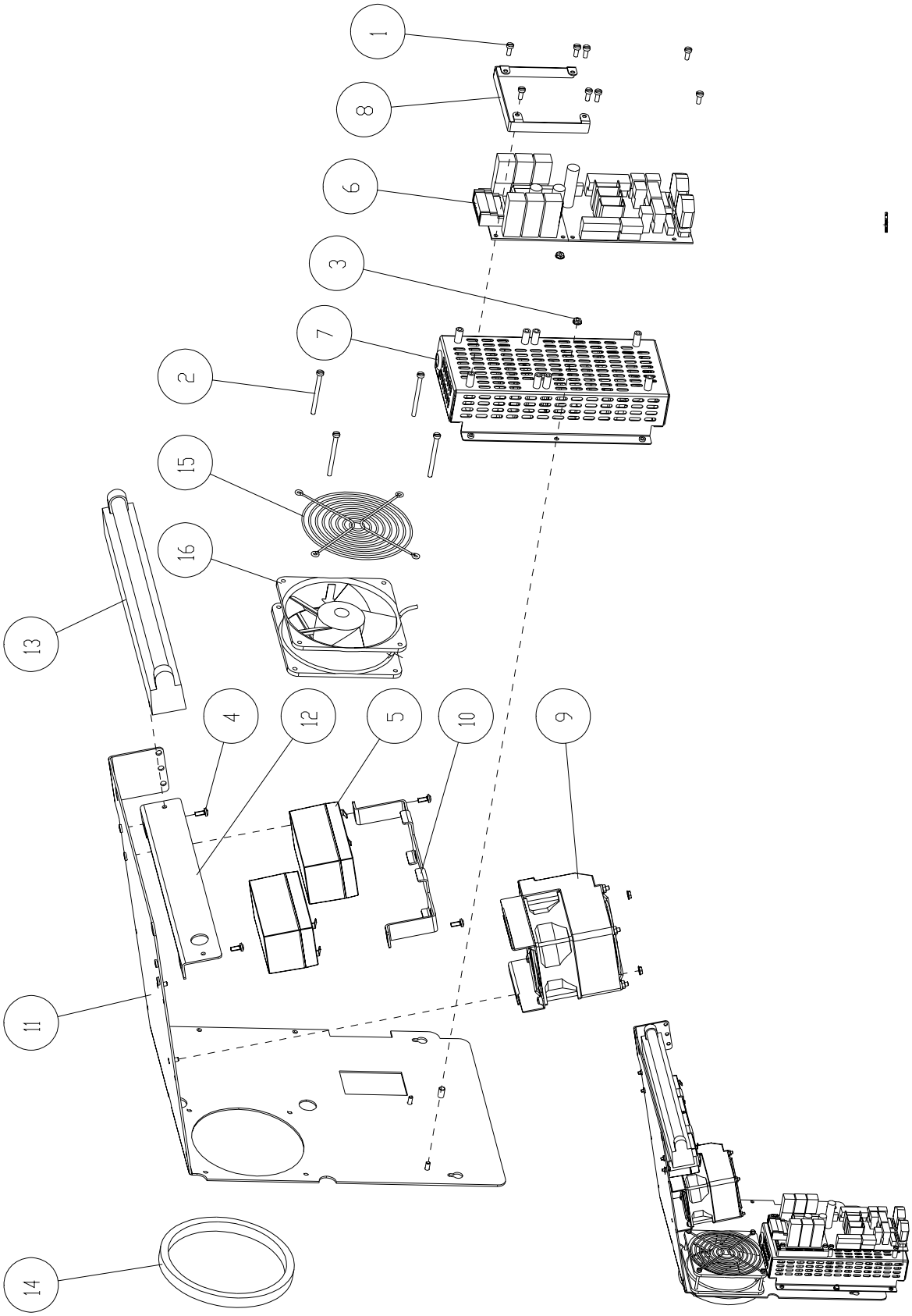
1
8
6
3
7
2
15
16
13
4
12
5
10
9
11
14

5.8 Crypto VGA PSU & Lamp Assembly

Item No	Description	Désignation Français	Part No	Comments
1	Screw SCH M4x10	Vis CS M4x10	900007-001	
2	Screw SCH M4x50	Vis CS M4x50	900007-007	
3	Nut Hex Self Lock M4	Ecrou Bride Autobloquant M4	900013-001	
4	Screw CRRCH M4x10	Vis CBLZ M4x10	900052-003	
5	Battery 12V 1.2AH	Battery 12V 1.2AH	900072	
6	PCB/OPT012/PIB/PWR INT BRD	PCB/OPT012/PIB/CARTE ALIM/COMM	901310	
7	OPT PSU Assy	OPT PSU Assy	902077	
8	DIT PSU PCB Guard	DIT PSU PCB Protecteur	902601	
9	DBK Heater 350W	Chauffage DBK 350W	909214-001	
10	Long Battery Bracket	Encadrer Batterie Longue	943471	
11	PSU Plate CCT/BNA C-VGA	PSU Plate CCT/BNA C-VGA	940477	
12	Light Bracket CCT	Allumer Encadrer CCT	940609	
13	Light Holder	Detenteur Allumer	940610	
14	Seal Fan OPT	Seal Fan OPT	942435	
15	Screen Grating Fan D120	Screen Grating Fan D120	942487	
16	Fan Assy	Sur Assy	942686	

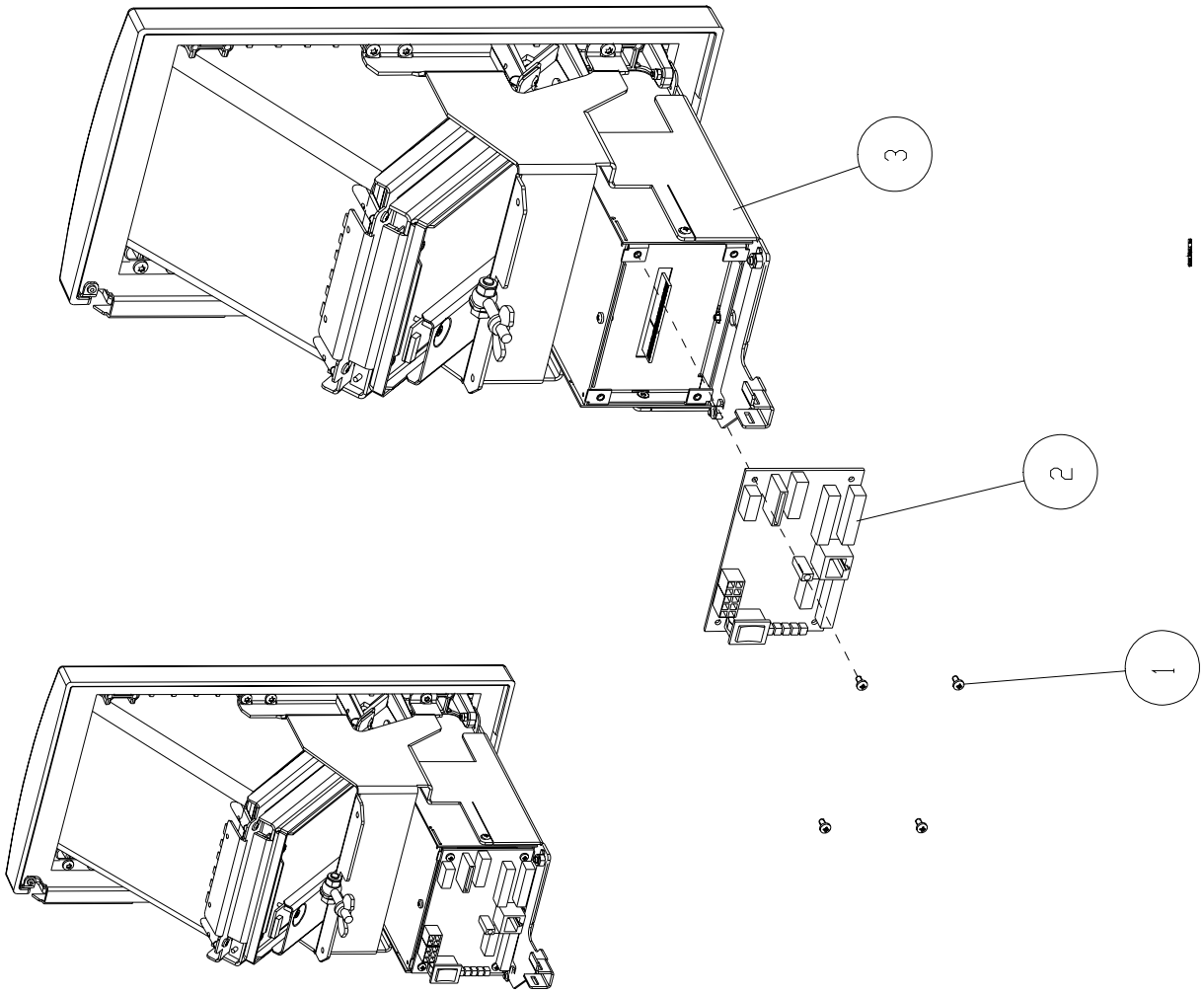
3
2
1

5.9 Crypto VGA Payment Assembly

Item No	Description	Désignation Français	Part No	Comments
1	Screw CRRCH M3x6	Vis CBLZ M3x6	900052-002	
2	PCB/OPT040/CIB/Crypto Interface Board	PCB/OPT040/CIB/Crypto Interface Board	909459	
3	Crypto VGA Assy Crypto VGA + RFID HW Assy	Crypto VGA Assy Crypto VGA + RFID HW Assy	943269 944153	

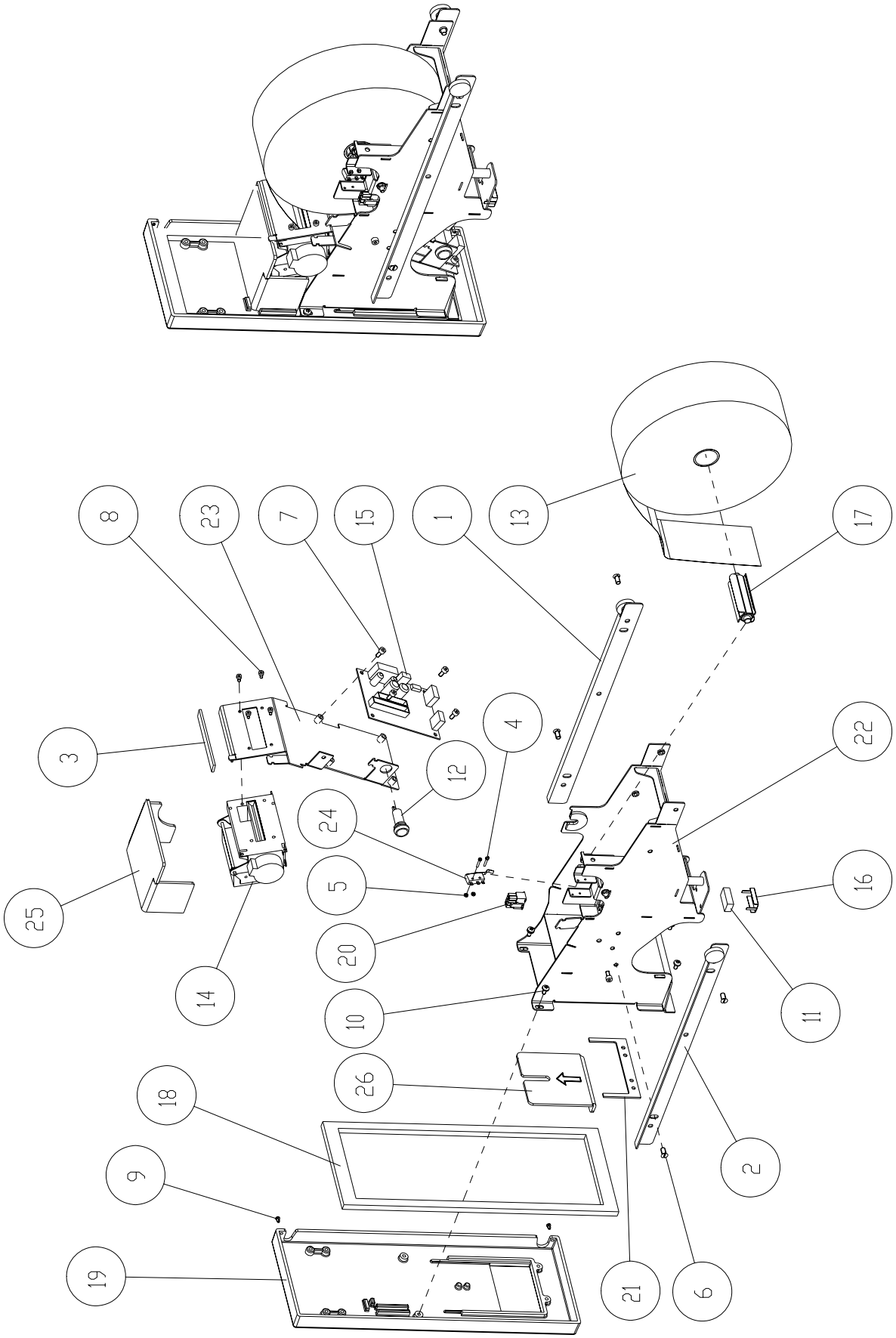
8
23
7
15
1
13
17
3
4
22
12
24
5
16
25
20
14
10
11
26
18
2
9
19
21
6

5.10 Crypto VGA Printer Assembly

Item No	Description	Désignation Français	Part No	Comments
1	Drawer Rail Left	Drawer Rail Left	55660000860C	
2	Drawer Rail Right	Drawer Rail Right	55660000860D	
3	Magstrip - 85mm	Magstrip - 85mm	5566000113-85	
4	Screw SCH M2x12	M2x12 Vis CS / CLS	900007-011	
5	Nut Hex M2	Ecrou Hex M2	900011-009	
6	Screw SCS M5X10	Vis FS M5X10	900014-008	
7	Screw HSHC M4x8	Vis CHC M4x8	900017-008	
8	Screw HSHC M3x6	Vis CHC M3x6	900017-016	
9	Rivet Rokut	Rivet Expansion	900022-002	
10	Screw Torx Thr Form BH M4x8	Vis Torx Auto FTCBL Tril M4x8	900053-006	
11	Nozzle Switch Magnet	Aimant Interrupteur Injecteur	900092	
12	Push Button Black	Le Bouton de Pression Noir	901934-001	
13	Paper Roll Ø200	Rouleau Papier Ø200	906691-006	
14	Printer Head Citizen LT-281	Printer Head Citizen LT-281	907360	
15	Printer Control Board DUR7002	Printer Control Board DUR7002	907363	
16	Magnet Holder	Magnet Holder	907779	
17	Mouled Paper Roll Axe	Axe de Rouleau Papier Moulé	908942	
18	Seal Printer Door Crypto VGA	Seal Printer Door Crypto VGA	909472	
19	Printer Door Crypto VGA	Printer Door Crypto VGA	909564	
20	Printer Cable CV 250 mm	Printer Cable CV 250 mm	909694-001	
21	Part of Crypto-VGA Bladel	Part of Crypto-VGA Bladel	909730	
22	Printer Frame Weld Assy	Printer Frame Weld Assy	941849	
23	Printer & PCB Bracket	Printer & PCB Support	941927	
24	Paper Low Switch CVGA	Paper Low Switch CVGA	942679	
25	Rain Cover Crypto-VGA	Rain Cover Crypto-VGA	945199	
26	Printer Door	Imprimeur Tiroir	945242	

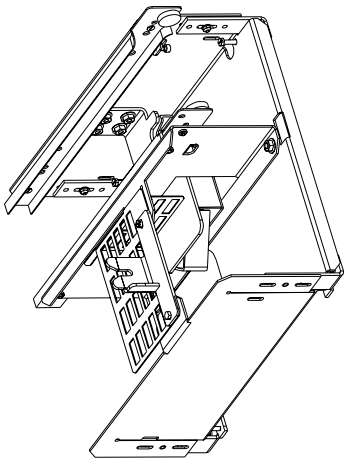

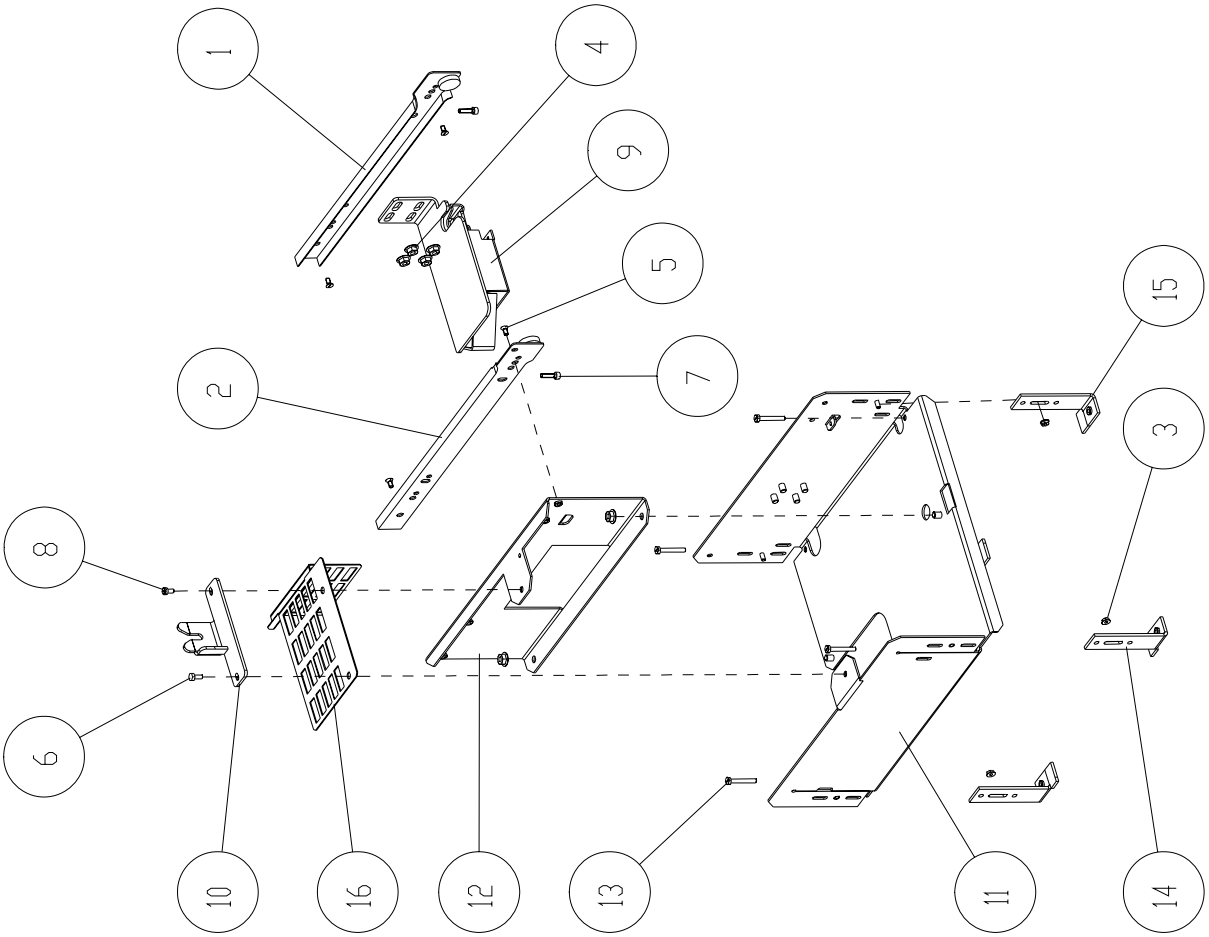
1
2
3
4
5
6
7
8
9
10
11
12
13
14
15
16

5.11 Crypto VGA Bracket Assemblies

5.11.1 SINGLE-SIDED

Item No	Description	Désignation Français	Part No	Comments
1	Drawer Rail	Tiroir Raille	5566000086A	
2	Drawer Rail	Tiroir Raille	5566000086B	
3	Nut Hex Self Lock M4	Ecrou Bride Autobloquant M4	900013-001	
4	Nut Hex Self Lock M6	Ecrou Bride Autobloquant M6	900013-003	
5	Screw SCS M4x8	Vis FS M4x8	900014-006	
6	Screw HH M4x10	Vis H M4x10	900015-001	
7	Screw HSHC M4x16	Vis CHC M4x16	900017-014	
8	M4x8 Sealing Screw	M4x8 Scellant Vis	901551-001	
9	Lock Assy Crypto VGA	Lock Assy Crypto VGA	-	Refer to Crypto VGA Lock drawing
10	Fork Bracket	Fork Bracket	909658	
11	CCT/BNA Bracket Crypto VGA	CCT/BNA Bracket Crypto VGA	940337	
12	Mid Bracket CCT	Mid Bracket CCT	940654	
13	Screw HH M4x30	Vis H M4x30	941115-003	
14	Height Adjustment Bracket Right	Height Adjustment Bracket Right	941394	
15	Height Adjustment Bracket Left	Height Adjustment Bracket Left	941395	
16	Sealing Plate CVGA OPT	Sealing Plate CVGA OPT	943262	

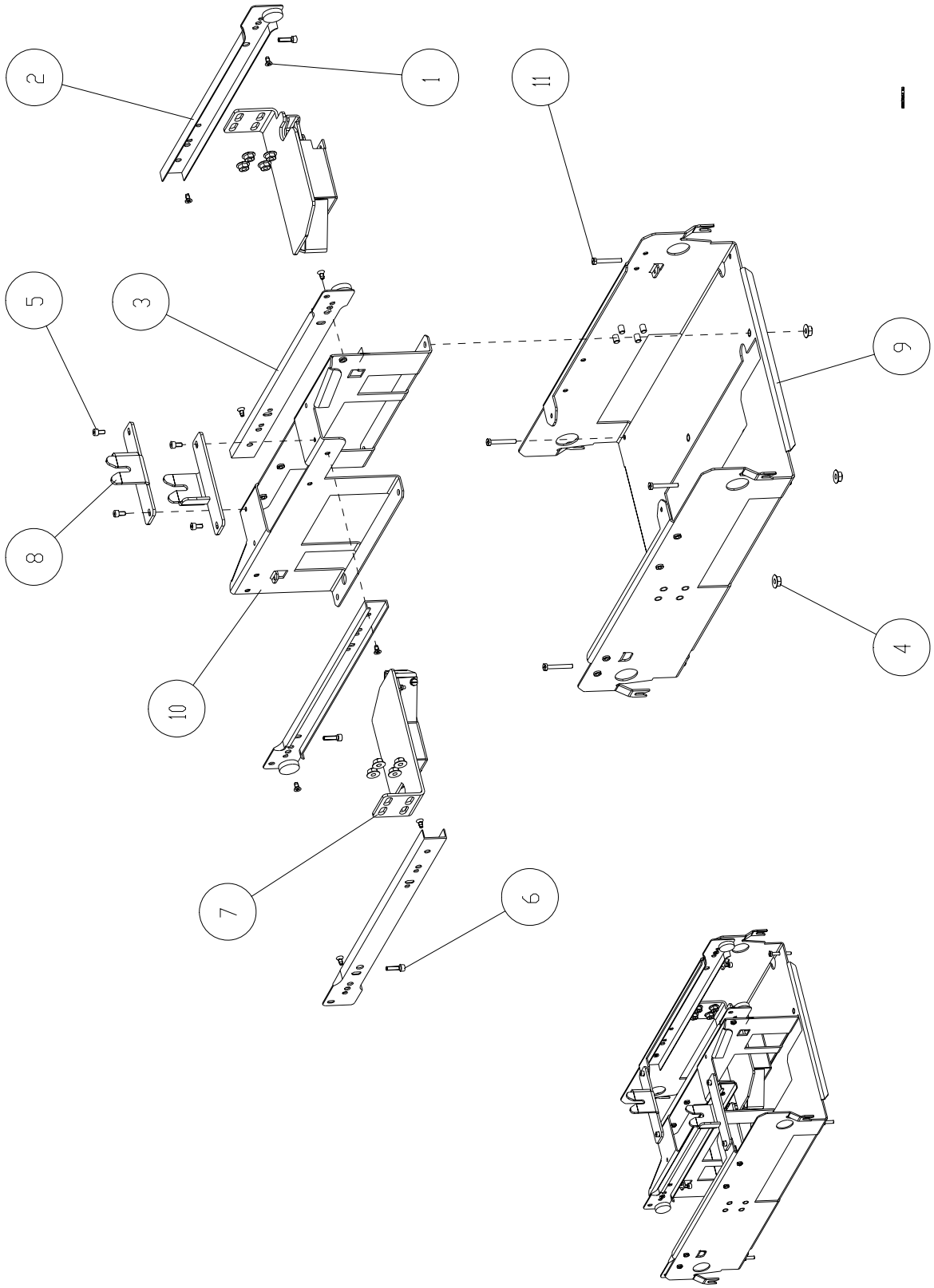
2
1
11
5
3
9
8
10
4
7
6

5.11.2 DOUBLE-SIDED

Item No	Description	Désignation Français	Part No	Comments
1	Screw Threadform CSK M4x8	Screw Threadform CSK M4x8	5512000074	
2	Drawer Rail	Tiroir Raille	5566000086A	
3	Drawer Rail	Tiroir Raille	5566000086B	
4	Nut Hex Self Lock M6	Ecrou Bride Autobloquant M6	900013-003	
5	Screw HSHC M4x8	Vis CHC M4x8	900017-008	
6	Screw HSHC M4x16	Vis CHC M4x16	900017-014	
7	Lock Assy Crypto VGA	Lock Assy Crypto VGA	909536	Refer to Crypto VGA Lock drawing
8	Fork Bracket	Fork Bracket	909658	
9	Bracket Crypto VGA Double	Bracket Crypto VGA Double	940709	
10	Mid-Bracket Crypto VGA Double	Mid-Bracket Crypto VGA Double	940710	
11	Screw HH M4x30	Vis H M4x30	941115-003	

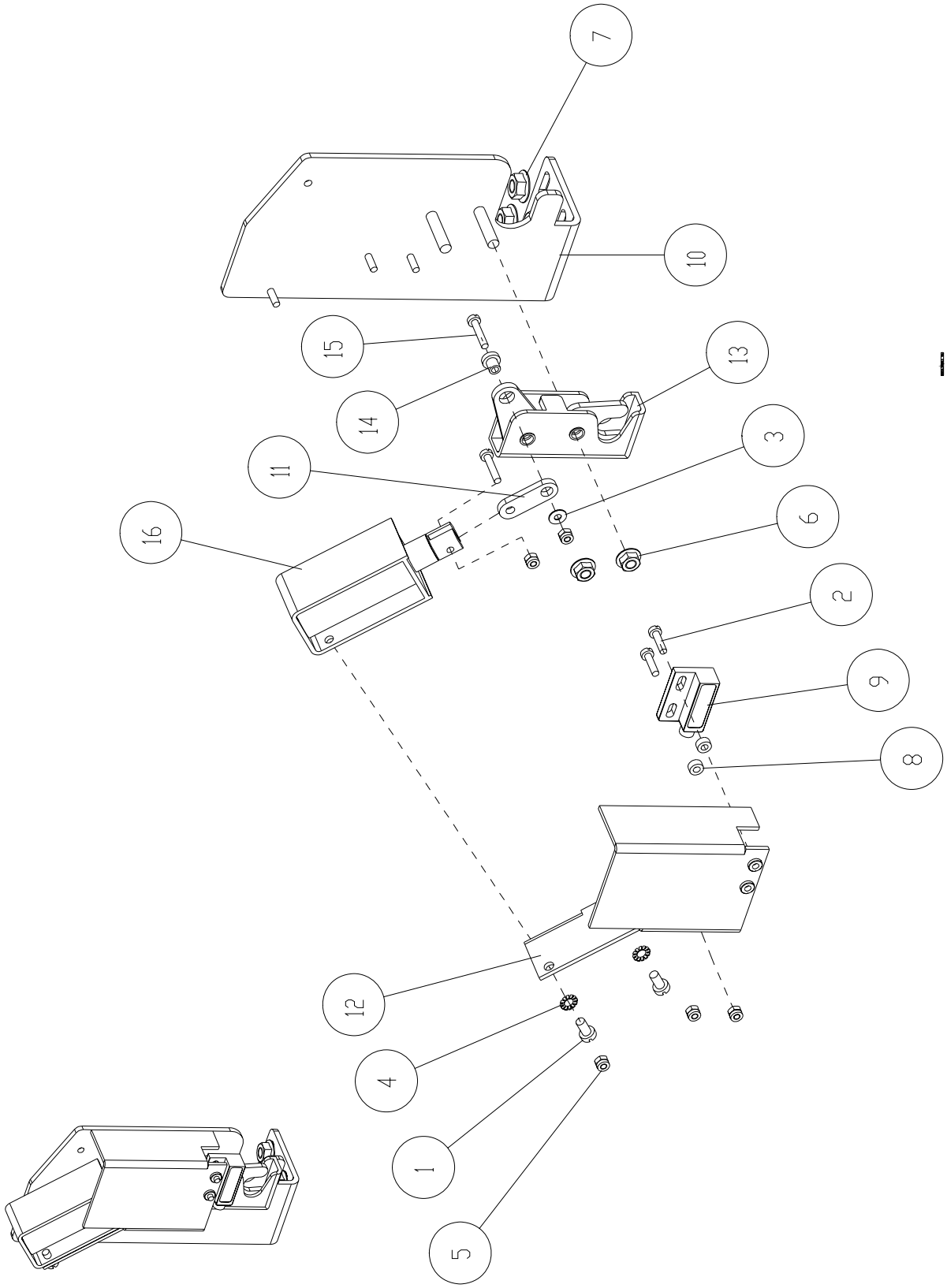
7
10
15
13
14
3
11
6
16
2
9
8
12
4
1
5

5.12 Crypto VGA Lock Assembly

Item No	Description	Désignation Français	Part No	Comments
1	Screw SCH M4x8	Vis CS M4x8	900007-003	
2	Screw SCH M3x12	Screw SCH M3x12	900007-010	
3	Washer Pl M3	Rondelle Pl M3	900008-010	
4	Washer Serr Lock Ext M4	Rondelle a Dents DEC M4	900009-001	
5	Nut Hex Prev Torque M3	Ecrou Frein M3	900012-001	
6	Nut Hex Self Lock M5	Ecrou Bride Autobloquant M5	900013-002	
7	Nut Hex Self Lock M6	Ecrou Bride Autobloquant M6	900013-003	
8	Spacer 3.2x6.3x3	Entretoise Cyl 3.2x6.3x3	900024-019	
9	Magnetic Proximity Switch	Contact Magnetiq. De Proximite	940151-001	
10	NL Lock Bracket	NL Verouiller Encadrer	905211	
11	NL Lock Link	NL Lock Link	905213	
12	NL Lock Cover	NL Lock Cover	905214	
13	Eberhard Rotary Latch	Eberhard Rotary Latch	905232	
14	Nylon Bearing Skiffy 008-0300	Nylon Bearing Skiffy 008-0300	9220117457	
15	Screw SCH M3x16	Vis SCH M3x16	9240000073	
16	NL Lock Solenoid	NL Lock Solenoid	940153	

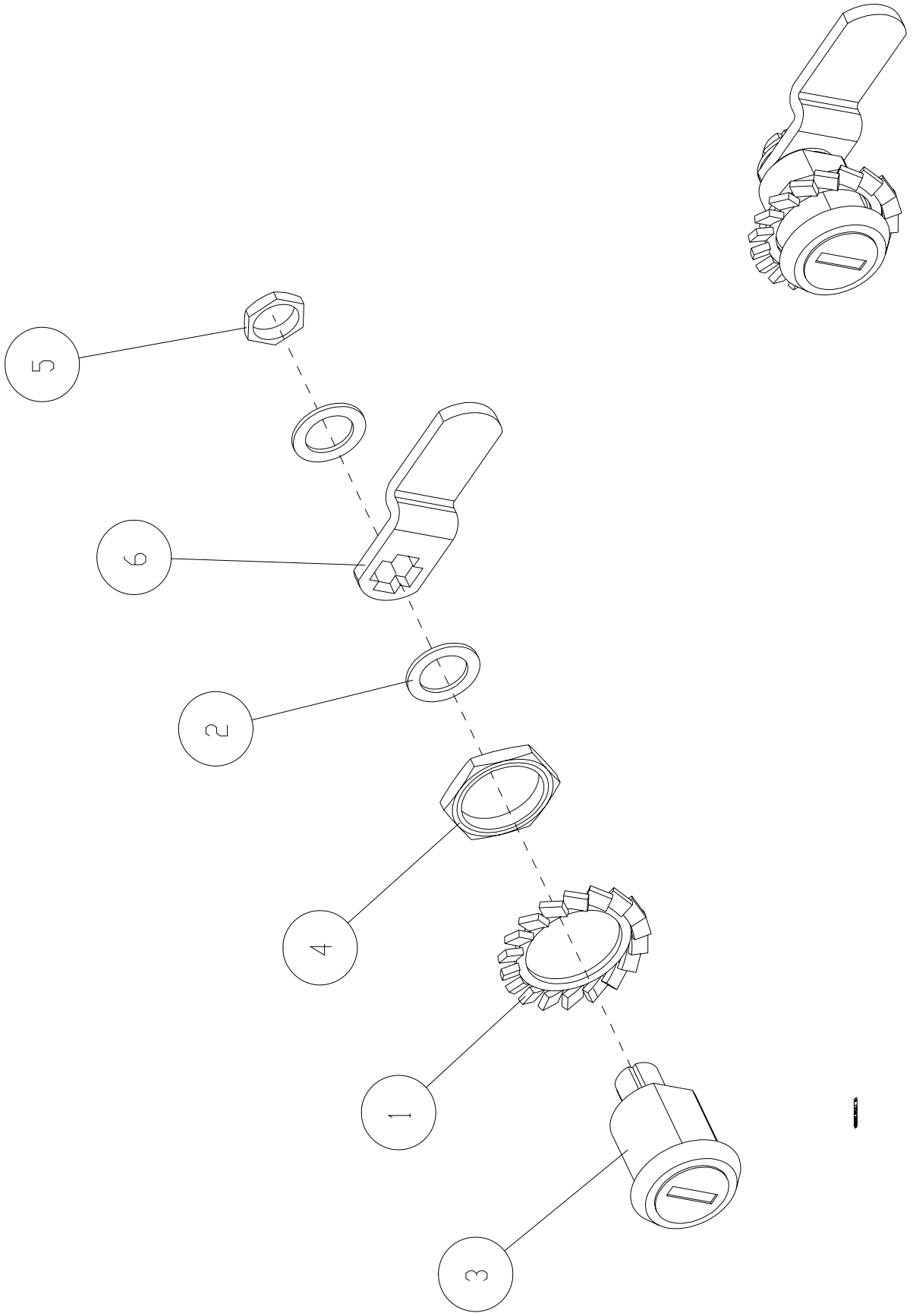
5
6
2
4
1
3

5.13 Euro Lock Assembly

Item No	Description	Désignation Français	Part No	Comments
1	Serrated Lock Washer id21	Veroille Rondelle Elast a Dents id21	5212000068	
2	Adjustment Washer 14x11x1 StZn	Adjustment Washer 14x11x1 StZn	5566000028	
3	Euro Lock Standard	Euro verouiller norme	5566000114	
4	Nut Hex 3/4 - 24 UNS	Ecrou Hex 3/4 - 24 UNS	900014-001	
5	Nut Hex M10x1.00 For Lock	Ecrou M10x1.00 Pour Serrures	900043-001	
6	Lock Cam	Came de Serrure	9220131475	

5.14 Recommended Spare Parts List

CRYPTO VGA TRINTECH

909470-001 Crypto VGA CTMK OASE

909470-002 Crypto VGA CTMK OASE CTAC

909470-003 Crypto VGA CTMK OASE Shell

909470-004 Crypto VGA CTMK OASE CETREL

909470-005 Crypto VGA CTMK OASE CTAC CETR

909470-006 Crypto VGA CTMK OASE SERMEPA

CRYPTO VGA CURRENCE

943268-001 CRYPTO VGA CTMK OASE PCCV

943268-002 CRYPTO VGA CTMK OASE PCCV CTAC

943268-003 CRYPT VGA CTMK OASE PCCV SHELL

CRYPTO VGA HARDWARE

909459 PCB/OPT040/CIB/CryptoIntBoard

CRYPTO VGA LOCK

909536 LOCK ASSY CRYPTO VGA

CRYPTO VGA PRINTER UNIT

909563 PRINTER DRAWER ASSY CRYPTO VGA

CRYPTO VGA HEATER UNIT

909214-001 DBK Heater 350W

CRYPTO VGA POWER SUPPLY UNIT

902077 OPT PSU Assembly

901310 PCB/OPT012/PIB/PWR INT BRD

CRYPTO VGA FAN UNIT

942686 Fan Assy

CONTENTS

6 CRYPTO VGA BASIC MAINTENANCE 6-2
6.1 Accessing the Crypto VGA 6-2
6.2 Cleaning Cards 6-2
6.2.1 Magnetic Stripe Cleaning Cards 6-2
6.2.2 Chipcard Cleaning Cards 6-2
6.3 Replacing a Paper Roll 6-3
6.4 Paper Jams 6-4
6.5 Printer Cutter Units/Blades 6-5
6.6 Cleaning the Display Screen 6-5
6.7 Bank Note Acceptors (BNA) 6-6
6.8 Changing a bulb (Crypto VGA OPTs only) 6-7
6.9 Changing the battery pack (Crypto VGA OPTs only) 6-8

6 CRYPTO VGA BASIC MAINTENANCE

6.1 Accessing the Crypto VGA

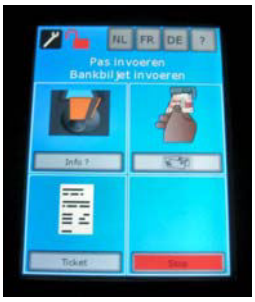

Access to the Crypto VGA unit is the same for standalone Outdoor Payment Terminals (OPTs) as for Dispenser Integrated Terminals (DITs).

Swipe the Maintenance/Service card at the Service Station Point of Sale (POS) or terminal and select the option Maintenance/ Service mode before attempting to access the OPT/DIT.

Note : A spanner on the display indicates the terminal is in Maintenance/Service mode.

DISARM THE ELECTRONIC LOCK

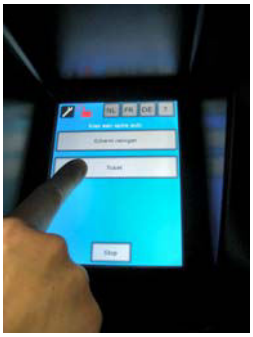

- Press first the spanner and then 'Ticket' on the OPT/DIT screen to disarm the electronic lock
- An audible alarm is sounded to alert the unit is open
- Pull the printer unit open

Note : The red open padlock on the display indicates the drawer is open and unalarmed.

- Close drawer to electronically lock

6.2 Cleaning Cards

Tokheim recommends the use of cleaning cards every two weeks to ensure optimal payment terminal operation. Cleaning cards can be purchased from your local Tokheim SSD.

6.2.1 MAGNETIC STRIPE CLEANING CARDS

- Insert the **white** cleaning card fully in and out of the slot 8-10 times using the <u>same part</u> of the card.
- Mark the used quadrant of the card after each cleaning and use a different part next time until all four quadrants are marked before disposing of the card.

6.2.2 CHIPCARD CLEANING CARDS

- Insert the **blue** cleaning card, white square facing upwards, fully into the card slot and hold in that position.
- Use your other hand to move the transparent strip up and down 8-10 times whilst still fully inserted.
- Mark the boxes on the cleaning card after each use, up to a max. of 12 times, before disposing of the card.

6.3 Replacing a Paper Roll

If the Crypto printer is out of paper then a warning screen is displayed and an alert may sound in the kiosk. To change the paper roll:-

1) Follow the instructions given in section 6.1 to gain access and authorisation to the payment terminal.

2) Fully open the printer unit.

3) Locate and remove the printer box cover.

4) Locate and lift out the empty cardboard roll.

5) Remove the roller from the empty cardboard roll and insert into the new paper roll.

6) Insert new paper roll into the printer unit, locating the roller in the position just above the designated slot.

IMPORTANT : Make sure the paper roll is placed so that the paper is fed from above.

7) Lift up the white tensioning lever and insert the start of the paper roll into the cutter unit feed slot.

8) Place white tensioning lever back into normal (under tension) position.

9) Position the roller into its correct slot position.

10) When correctly inserted, the paper will automatically feed through to the correct position.

11) Press 'Ticket' on the touch screen to print out a dummy ticket to verify the correct operation of the printer.

IMPORTANT : The ticket will not print if the paper has been incorrectly fed from the bottom of the roll as the paper is thermal on one side only.

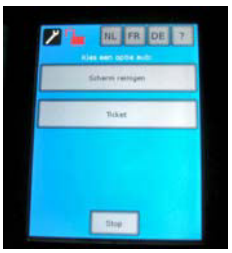

12) Re-fit the printer box cover.

13) Close the Crypto VGA printer drawer to reset alarm.

14) Return the relevant Crypto VGA to Normal mode at the POS.

6.4 Paper Jams

To clear a paper jam:-

1) Follow the instructions given in section 6.1 to gain access and authorisation to the payment terminal.

2) Fully open the printer unit.

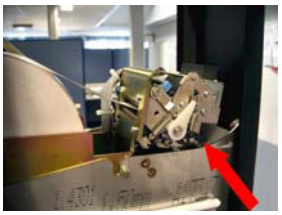

3) Locate and remove the printer box cover.

4) Locate the black clip on the printer cutter and lift the cutter up.

5) Holding the cutter in the up position, carefully remove all jammed paper then gently place the cutter unit back in position.

6) Lift up the white tensioning lever and re-feed the paper roll back into the cutter unit feed slot (cut the paper to give a straight edge if required).

7) Place white tensioning lever back into normal (under tension) position.

8) When correctly inserted, the paper will automatically feed through to the correct position.

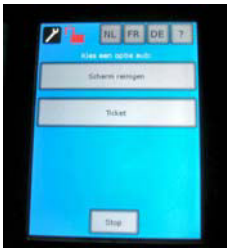

9) Press 'Ticket' on the touch screen to print out a dummy ticket to verify the correct operation of the printer.

IMPORTANT : The ticket will not print if the paper has been incorrectly fed from the bottom of the roll as the paper is thermal on one side only.

10) Re-fit the printer box cover.

11) Close the Crypto VGA printer drawer to reset alarm.

12) Return the relevant Crypto VGA to Normal mode at the POS.

6.5 Printer Cutter Units/Blades

Only Tokheim authorised service engineers are permitted to replace the printer cutter unit. Contact your nearest Tokheim SSD (refer to back cover of this manual).

6.6 Cleaning the Display Screen

The Crypto VGA touchscreen should be cleaned every two weeks using a Tokheim Cleaning Kit.

IMPORTANT : Excessive use of water or any other liquids will invalidate your warranty.

To clean the screen, the keys must be disabled first:-

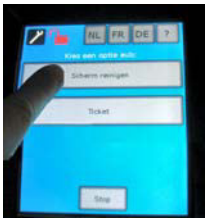

1) Follow the instructions in section 6.1 to enter Maintenance/Service mode.

2) Follow the on-screen instructions to select Clean Screen (a 10 second countdown timer allows the screen to be cleaned)

3) Use the Wet Synthetics Cleaning pad to clean the touchscreen surface and the front fascia

4) Use the dry Lint-free fleece cloth to dry the touchscreen and front fascia.

5) Close the Crypto VGA printer drawer to reset alarm.

6) Return the relevant Crypto VGA to Normal mode at the POS.

Note : a Starter Cleaning Set (6 wet/dry twin pads, 3 magstripe cleaning cards, 1 chipcard cleaning card) is included in the Crypto VGA delivery. Subsequent packs can be orderded from your local Tokheim SSD.

6.7 Bank Note Acceptors (BNA)

To empty the money box/bag :-

1) Follow the instructions given in section 6.1 to gain access and authorisation to the payment terminal.

2) Use the large safe door key to unlock the safe door then use the allen key to release the safe door deadlocks.

3) Open the safe door to gain access to the safe money box/bag.

4) **MONEY BAG ONLY**

- Pull out the money bag to empty (on runners).

5) **MONEY BOX ONLY**

- Use the money box radial tumbler key to release the money box from the safe box unit.

  Note : Once the money box is released from the safe box unit, a red light appears on the money box. The red light indicates that the safe cannot be replaced back into the unit until the money box has been opened and emptied.

- Use the money box key to open the back of the money box and remove all banknotes from inside the money box.
- Close and lock the money box.

  Note : Once money box has been emptied, the red light will turn green and the money box can be replaced back into the safe box unit.

- Replace the money box back into the safe box unit and lock in position using the money box radial tumbler key.

6) Close the safe door and use the allen key to enable the deadlocks and lock using the safe door key.

7) Close the Crypto VGA printer drawer to reset alarm.

8) Return the relevant Crypto VGA to Normal mode at the POS.

6.8 Changing a bulb (Crypto VGA OPTs only)

In order to change the bulb, the printer and Crypto VGA units must be removed completely.

1) Follow the instructions in section 6.1 to enter Maintenance/Service mode.

2) Fully open the printer unit.

3) Unplug all connections on the printer unit.

4) Carefully lift up the printer unit and slide off its drawer runners.

5) Remove the printer unit completely and place in a safe position.

6) Locate the bulb and bracket inside the OPT head.

7) Twist the bulb 90° to release it from the bracket.

8) Carefully remove the bulb completely.

9) Fit new bulb into the bracket and twist to secure in position.

10) Place the printer assembly back into the unit on its drawer runners.
11) Plug in all connections on the printer unit.
12) Close the Crypto VGA printer drawer to reset alarm.
13) Return the relevant Crypto VGA to Normal mode at the POS.
14) Check operation of the new bulb.

6.9 Changing the battery pack (Crypto VGA OPTs only)

In order to change the back-up battery pack, the printer and Crypto VGA units must be removed completely.

1) Follow the instructions in section 6.1 to enter Maintenance/Service mode.

2) Fully open the printer unit.

3) Unplug all connections on the printer unit.

4) Carefully lift up the printer unit and slide off its drawer runners.

5) Remove the printer unit completely and place in a safe position.

6) Reach inside and undo the wing nut securing the Crypto VGA unit.

7) Unplug all connections on the Crypto VGA unit.

8) Carefully lift out the Crypto VGA unit completely and place in a safe position.

9) Locate the back-up battery pack inside the OPT head.

10) Undo the spade connections on the battery pack.

11) Locate two screws at either end of the battery pack bracket.

12) Whilst supporting the battery pack and bracket, loosen and remove the two screws completely.

13) Carefully remove the battery pack and bracket completely.

14) Fit new battery pack into the bracket.
15) Re-fit the bracket and battery pack into the unit and re-fit and tighten the two screws to secure in position.
16) Plug in the spades onto the new battery pack.
17) Plug in all the connections on the Crypto VGA unit.
18) Place the Crypto VGA unit back into the unit and secure in position by tightening the wing nut.
19) Place the printer assembly back into the unit on its drawer runners.
20) Plug in all connections on the printer unit.
21) Close the Crypto VGA printer drawer to reset alarm.
22) Return the relevant Crypto VGA to Normal mode at the POS.
23) Check operation of the new battery.

This page is intentionally blank

This page is intentionally blank

NL ***Spare Parts***
Koppens Automatic (Bladel)
Industrieweg 5
5531 AD Bladel
The Netherlands
☎ +31 497 389 555
🗐 +31 497 381 950

GB ***Manufacturing***
Unit 3, Baker Road
West Pitkerro Industrial Estate
Dundee DD5 3RT
Scotland
☎ +44 (0)1382 598000
🗐 +44 (0)1382 598001

F ***Manufacturing***
Route de Soliers
14540 Grentheville
BP268, Caen Cedex 14013
France
☎ +33 231 15 15 15
🗐 +33 231 23 15 06

SALES & SERVICE DIVISIONS

EUROPE

A **Austria**
Tokheim Austria GMBH
Eitzenberger Strasse 4-6
A-2544 Leobersdorf
☎ +43 (0) 2256 606 0
🗐 +43 (0) 2256 606 170
✉ office@leobersdorf.tokheim.com

B **Belgium**
Tokheim
Everdongenlaan 31
2300 Turnhout
☎ +32 (0) 14 44 85 00
🗐 +32 (0) 14 44 85 55
✉ sales@turnhout.tokheim.com

CZ **Czech Republic**
Tokheim
Pernerova 48
CZ-18602 Prague 8
☎ +420 224 890 312
🗐 +420 222 327 267
✉ pribrsky@prague.tokheim.com

DK **Denmark & Scandinavia**
Tokheim Scandinavia A/S
Hejrevang 10
3450 Allerød
☎ +45 48 13 45 45
🗐 +45 48 17 45 96
✉ service@alleroed.tokheim.com

F **France - Le Plessis**
Tokheim Services France
9 Avenue Galilée
92350 Le Plessis-Robinson
☎ +33 (0)1 41 36 13 00
🗐 +33 (0)1 41 36 13 70
✉ info@tokheim-services.com

F ***Tokheim Europe & Africa Headquarters***
ZAC Paris Nord 2
B.P. 40027 Tremblay-en-France
95912 Roissy C.D.G. Cedex
☎ +33 (0)1 49 90 77 00
🗐 +33 (0)1 49 90 77 77
✉ marcom@tremblay.tokheim.com

D **Germany**
Tokheim GmbH
Lothstrasse 1a
D-80335 München
☎ +49 (0)89 189 53 0
🗐 +49 (0)89 189 53 148
✉ service@muenchen.tokheim.com

I **Italy**
Tokheim Sofitam Italia S.r.l.
Quattordio Km 10800
S.P. 26
14030 Scurzolengo (AT)
☎ +39 0141 2038200
🗐 +39 0141 2038222
✉ info@asti.tokheim.com

NL **Netherlands**
Tokheim Netherlands B.V.
Touwslagerstraat 17
Postbus 4186
2980 GD Ridderkerk
☎ +31(0) 180 48 15 00
🗐 +31(0) 180 48 15 55
✉ sales@ridderkerk.tokheim.com

PL **Poland**
Pol-Germann Tokheim Sp. z.o.o.
ul. Narwicka 1
PL-80-557 Gdansk
☎ +48 58 343 21 71
🗐 +48 58 343 22 15
✉ pol-germann@tokheim.pl

P **Portugal**
G.N.C.
Parque de Ciencia e Tecnologia
Edificio Tecnologia 1, N° 27
2780-920 Oeiras
Lisboa
☎ +351 214 220 420
🗐 +351 214 214 226

RUS **Russia & CIS Countries**
Tokheim Representative Office
Room 313, Hotel "Ukraina"
Kutuzovski Prospekt, 2/1
Stroyenie 1
Moscow 121249
☎ +7 095 933 69 35
🗐 +7 095 933 69 34
✉ kolobov@dol.ru

SK **Slovak Republic**
Tokheim
Mlynske Nivy 70
SK-82015 Bratislava
☎ +421 2 58 27 02 15
🗐 +421 2 52 41 41 23
✉ schroeder@berlin.tokheim.com

E **Spain**
Tokheim Koppens Iberica S.A.
Calle La Granja, 41
Poligono Industrial de Alcobendas
28108 Alcobendas (Madrid)
☎ +34 91 2030465
🗐 +34 91 6614130
✉ urra@madrid.tokheim.com

CH **Switzerland**
Tokheim Switzerland AG/SA/LTD
Route du Crochet 7
Case Postale 50
1762 Givisiez
☎ +41 (0)26 460 51 11
🗐 +41 (0)26 460 51 12
✉ user@givisiez.tokheim.com

GB **United Kingdom**
Unit 1, Baker Road
West Pitkerro Industrial Estate
Dundee DD5 3RT
Scotland
☎ +44 (0)1382 483500
🗐 +44 (0)1382 731835
✉ service@tokheimuk.com

MIDDLE EAST, SOUTH & CENTRAL AMERICA

F **Export Division**
ZAC Paris Nord 2
B.P. 40027 Tremblay-en-France
95912 Roissy C.D.G. Cedex
France
☎ +33 (0)1 49 90 77 56
🗐 +33 (0)1 49 90 77 93
✉ marcom@tremblay.tokheim.com

AFRICA

RFC **Cameroon**
Socatam S.A.
BP 3941
Douala
☎ +237 40 57 86
🗐 +237 40 57 88
✉ socatam.douala@camnet.cm

MA **Morocco**
Matam S.A
209 Bld Moulay Ismail
Route de Rabat
Casablanca
☎ +212 22 40 40 24
🗐 +212 22 40 40 21
✉ matam@wanadoo.net.ma

SN **Senegal**
Cosetam S.A.
Quartier de Bel Air
Route des Hydrocarbures
BP 1237
Dakar
☎ +221 832 23 71
🗐 +221 832 68 34
✉ cosetam@ns.arc.sn

ZA **South Africa**
Tokheim South Africa Ltd
Stand 110, Precision Road
Kya Sand
Randburg
☎ +27 11 462 2105
🗐 +27 11 462 1942
✉ tokheimsales@tokheim.co.za

TN **Tunisia**
Cottam SARL
116 Ave de l'Union du Maghreb Arabe
BP 117
La Soukra
2036 Tunis
☎ +216 175 95 50
🗐 +216 175 95 30
✉ cottam@cottam.com.tn

ASIA

AE Tokheim
PO Box 16869
JAFZ
Dubai, UAE
☎ +971 4 881 3305
🗐 +971 4 881 4463
✉ tokheim@emirates.net.ae

As Tokheim regularly improves its products to ever better respond to evolving market and regulatory requirements, it reserves the right to change any of the specifications of these products, and this without prior notice.

For technical manual enquiries,
contact: author@dundee.tokheim.com